SNS
Beam Loss Monitor System

David M. Gassner

BNL

Diagnostics Review December 14-15, 2000

Acknowledgments

Contributors:

Richard Witkover

Valuable discussions with the SNS, LANL, and BNL Diagnostics groups.

References:

R. Hardekopf "Beam Loss and Activation at LANSE and SNS"
LA-UR-99-6825 LANL, Sept. 1999

M. Plum "Response of Air filled Ion Chambers to High Intensity Radiation Pulses"
1993 PAC, p2181.

H. Ludewig BNLSNS Tech note 077.

Bicrocell Bicron, Saint–Gobain Industrial Ceramics, Inc. Newbury OH

Outline

1. Schedule
2. System Requirements
3. Design Features
4. Loss Locations
5. BLM Distribution
6. Design Calculations
7. Detectors
   - A. Ion Chamber BLM
     - 1) Ion Chamber Response
       - a) Low Level
       - b) High Level
   - B. Liquid Scintillator FBLM
8. Front End Block Diagram
9. Data Acquisition
10. Summary

Schedule

Revisions:

Preliminary Design Review	**April 2001**
Final Design Review	**January 2002**
Design Complete	**April 2002**
Installation	**Aug - Dec 2003**

Activity Description	Early Start	Early Finish
1.0 Spallation Neutron Source Project		
1.5 Ring and Transport System		
1.5.7 Ring Systems Diagnostics Instrumentation		
1.5.7.3 Beam Loss Monitor [BLM]		
B L M P D R	22JAN01	
B L M F D R	21SEP01	
B L M System Definition (FY00)	01OCT99A	29SEP00A
B L M System Definition (FY01) delete	01DEC00	01DEC00
B L M Prelim Design (FY01)	01DEC00	19JAN01
B L M Detail Design (FY01)	22JAN01	28SEP01
B L M Detail Design (FY02)	01OCT01	31DEC01
B L M Design Complete		31DEC01
*Beam Loss Monitor I C D - Prelim > Controls	04DEC00	
*Beam Loss Monitor I C D - Final > Controls		03DEC01
B L M Procure/Fab/Assy	02JAN02	14MAR03
B L M Test	02OCT02	01DEC03
B L M Install - LINAC	11AUG03	22AUG03
B L M Install - HEBT	21OCT03	03NOV03
B L M Install - RING	11DEC03	26DEC03
B L M Install - RTBT	11DEC03	26DEC03
B L M Install Compl		26DEC03
B L M Comp. Test @ Site - LINAC	25AUG03	24NOV03
B L M Comp. Test @ Site - HEBT	04NOV03	10FEB04
B L M Comp. Test @ Site - RING	29DEC03	30MAR04
B L M Comp. Test @ Site - RTBT	29DEC03	30MAR04
*RTBT B L M I C D - Prelim > Controls	04DEC00	
*RTBT B L M I C D - Final > Controls		03DEC01

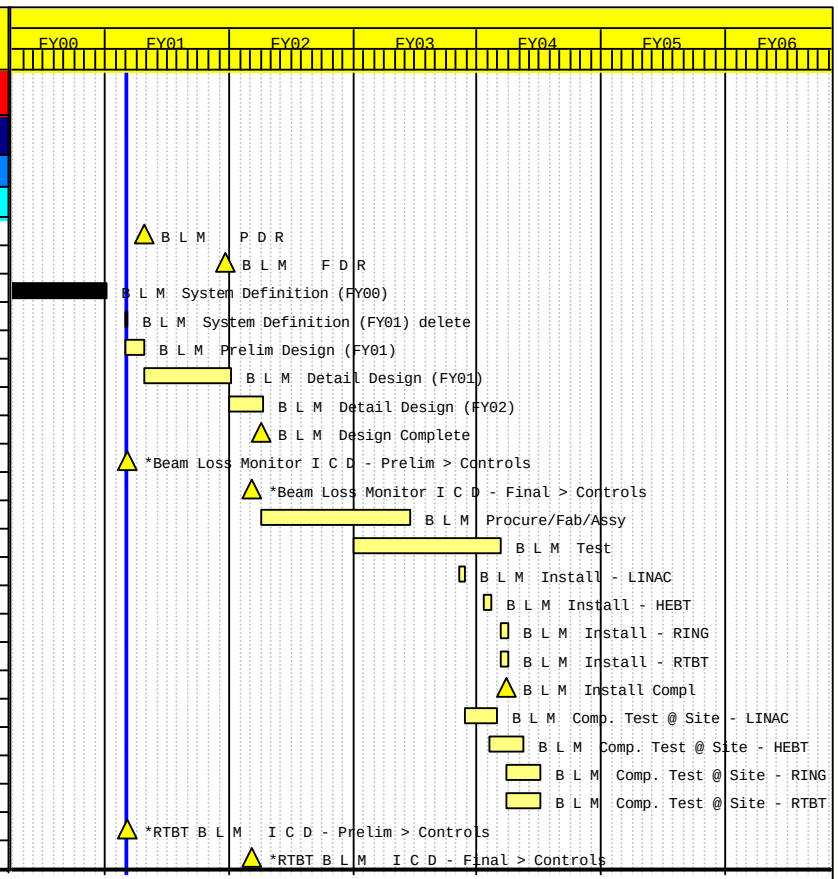

BLM System Requirements

- **Protect the machine from high activation (1W/m criteria)**
- **Protect the machine from radiation damage (Abort Trigger)**
- **Provide measurements of loss for tuning**
- **Will not be used for personnel safety**

BLM System Requirements Details

(A. Fedotov)

Ring System Diagnostics AP Requirements (12/2000)							
Device	Location	Intensity	Range	Accuracy	Resolution	Data structure	Comments
		[ppp]					
BLM (10 HZ)	Linac-Ring Sys	1e7 - 2e14	1-1000 rem/h	1%	0.6% (0.5 r/h)	average at 10 Hz	of 1 W/m
BLM (35 KHZ)	Linac-Ring Sys	6e8 - 2e14	30-2.5e5 rem/h	1%	30 rem/h	once/10 turns	
FBLM	SCL-to-HEBT		1-1000 rem/h ?			inside mini pulse	fast; not calibrated
	Ring		1-1000 rem/h ?			intra turn	fast; not calibrated

BLM Design Features

- **Wide Dynamic Range (IC 6 Decades)** **(2 dn, 4 up)**

- **Gain adjustment (per channel)**
  - Beam intensities
  - Detector shielding

- **Response Time**
  - **Ion Chamber**
    - Micro-second response. Data can be available for multi-turn, per cycle, and per second intervals.
  - Order of 5-10 turns to generate Permit Link Fail (35 KHz BW = 10us)
  - **Liquid Cell/ PMT**
    - Fast (ns), within turn loss data

- **Beam Abort Trip Sensing**
  - Independent levels for fast trips and masking (per channel)
  - Not the first line of defense (current comparators on magnets)

SNS Beam Loss Locations

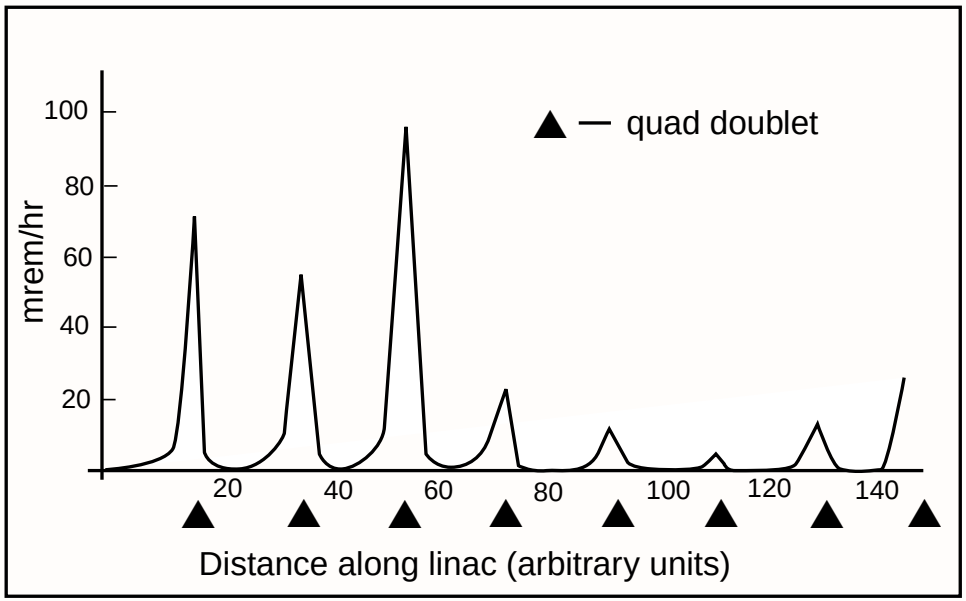

R. Hardekopf, LANSCE CCL Losses

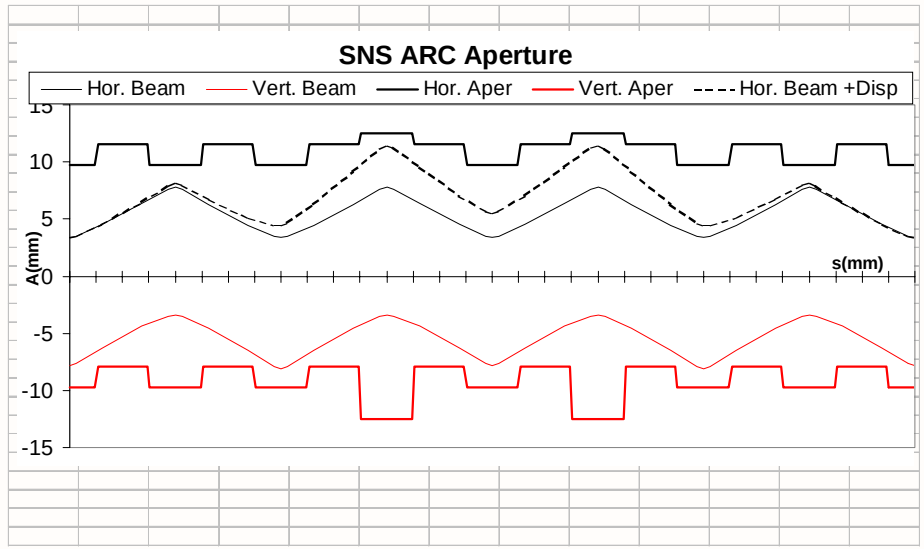

Locations of possible beam loss in the Ring Arcs.

Collimation Section Dose During Operation

(H. Ludewig)

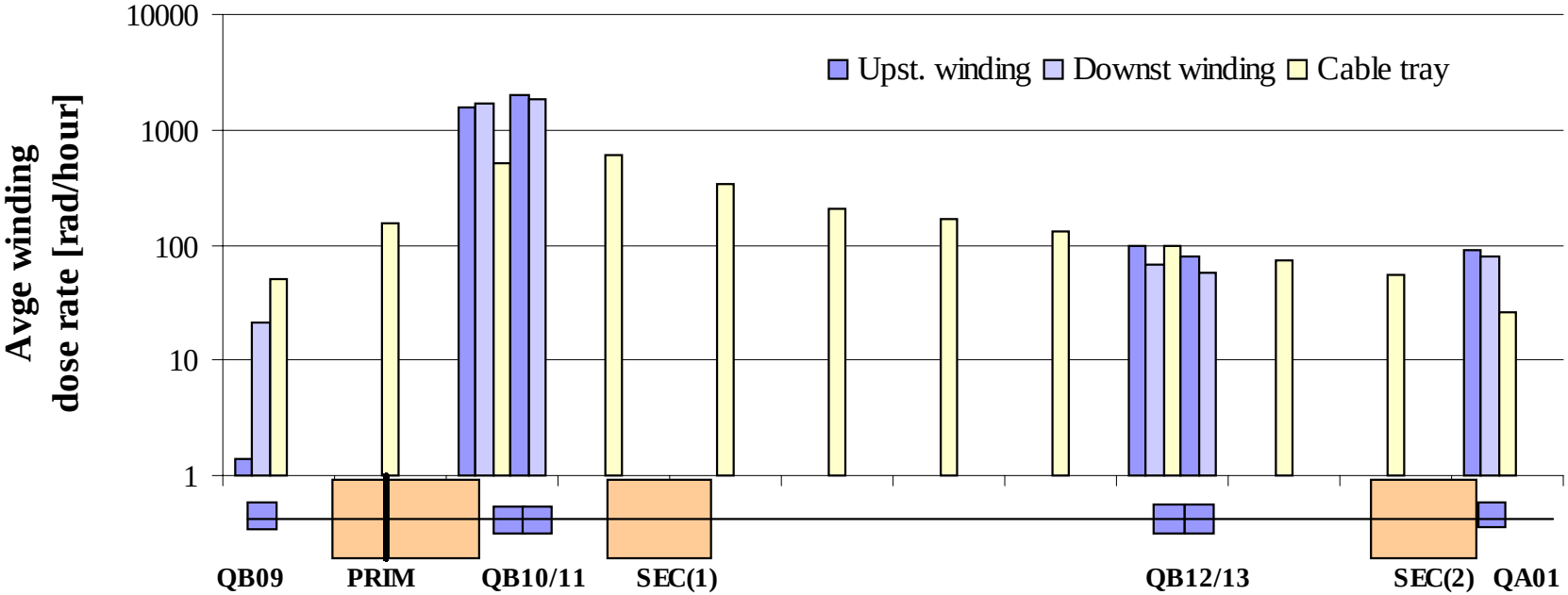

- Simulated 1 GeV, 2 MW beam, 0.1% loss, using MCNP code, BNLSNS Tech note 077.
- Hottest spot kRad/hour

BLM Distribution

	Linac	HEBT	RING	RTBT
BLM	DTL-12 CCL-24 SRF-64	52	75	40
FBLM	0	3	12	3
Design Peak Current	100mA pulse train	100mA pulse train	0.1A to 100A ramping pulse	100A pulse

Total: 267 Ion Chambers in Linac, HEBT, Ring, & RTBT

Linac DTL At tanks
CCL At quads
SRF On top of, and between doublets (4m apart)

Transports At quads, collimators, dumps.

Ring
- 44 at quads (beta max)
- Injection, extraction, collimators, RF
- relocatable units

Linac Loss Monitors

DTL 12 BLM's, at each of the Tanks, Energy 2.5 to 86 MeV, length 36.5 m

CCL 24 BLM's, at every other Quad, Energy 86 to 186 MeV , length 55.4 m

SRF 64 BLMs should be located above the doublets and midway between the doublets. This would space the BLMs at about 4 meters. Energy 186 to 949 MeV, length 235 m.

SRF-64 **CCL-24** **DTL-12**

HEBT Loss Monitors

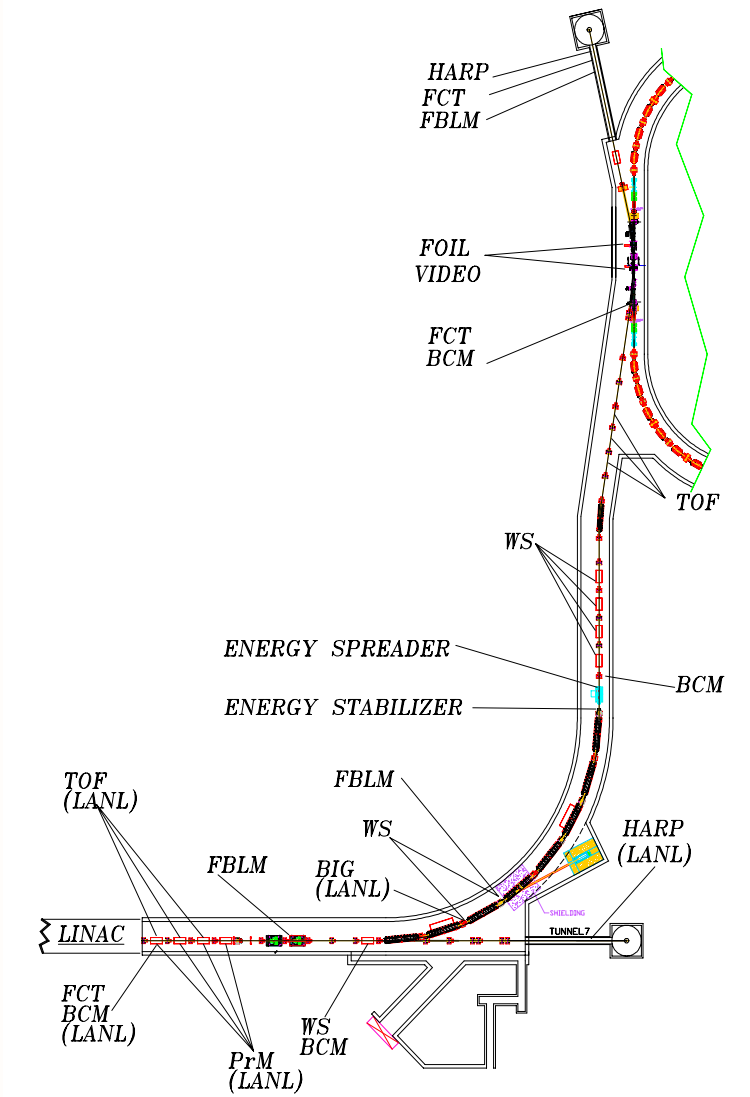

SNS Beam Loss Monitor

169 meters

BLM Location	Quantity
Quads	37
Collimator	2
Cavities	2
Dump	2
BIG	1
Moveable	8

FBLM Location	Quantity
Upstream	1
Bend	1
Dump	1

Ring Loss Monitors

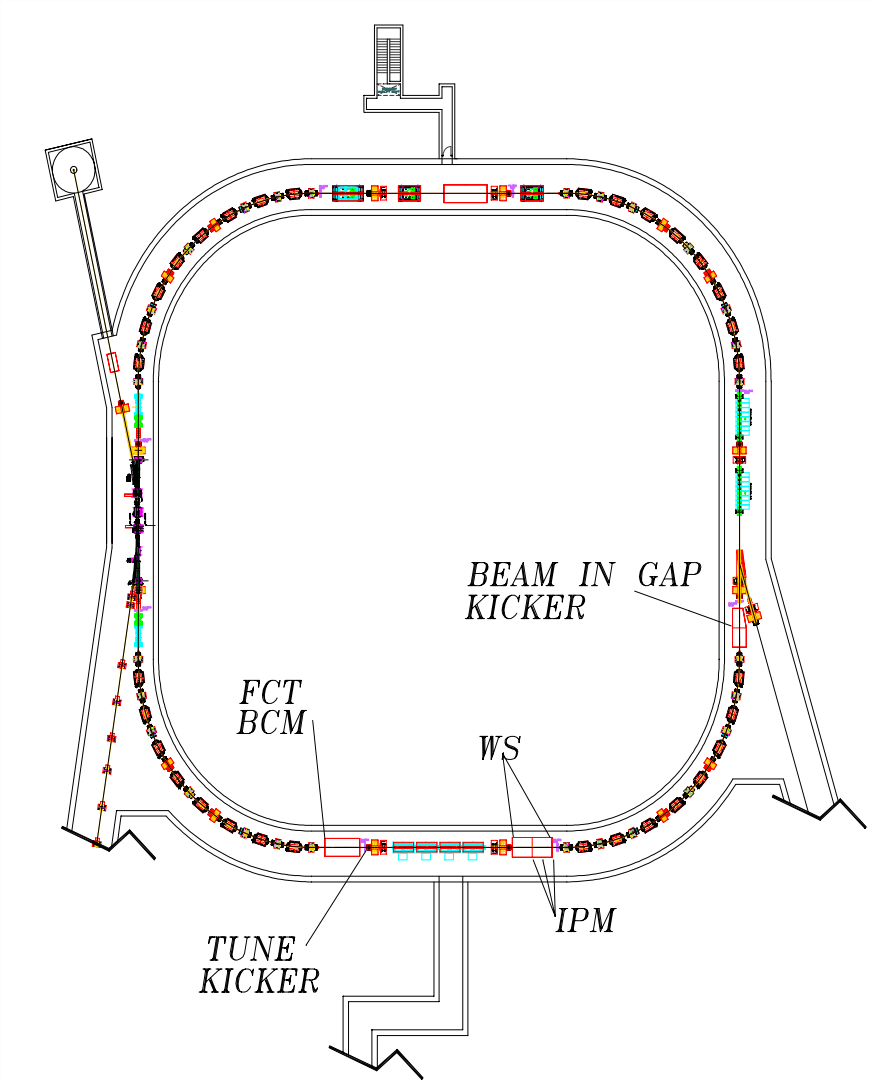

248 meter circumference

BLM Location	Quantity
Quad	44
Injection	7
Collimators	7
RF	5
Extraction	5
Moveable	7

FBLM Location	Quantity
Injection	2
Straight Sec. End	4
Bends	4
Extraction	2

RTBT Loss Monitors

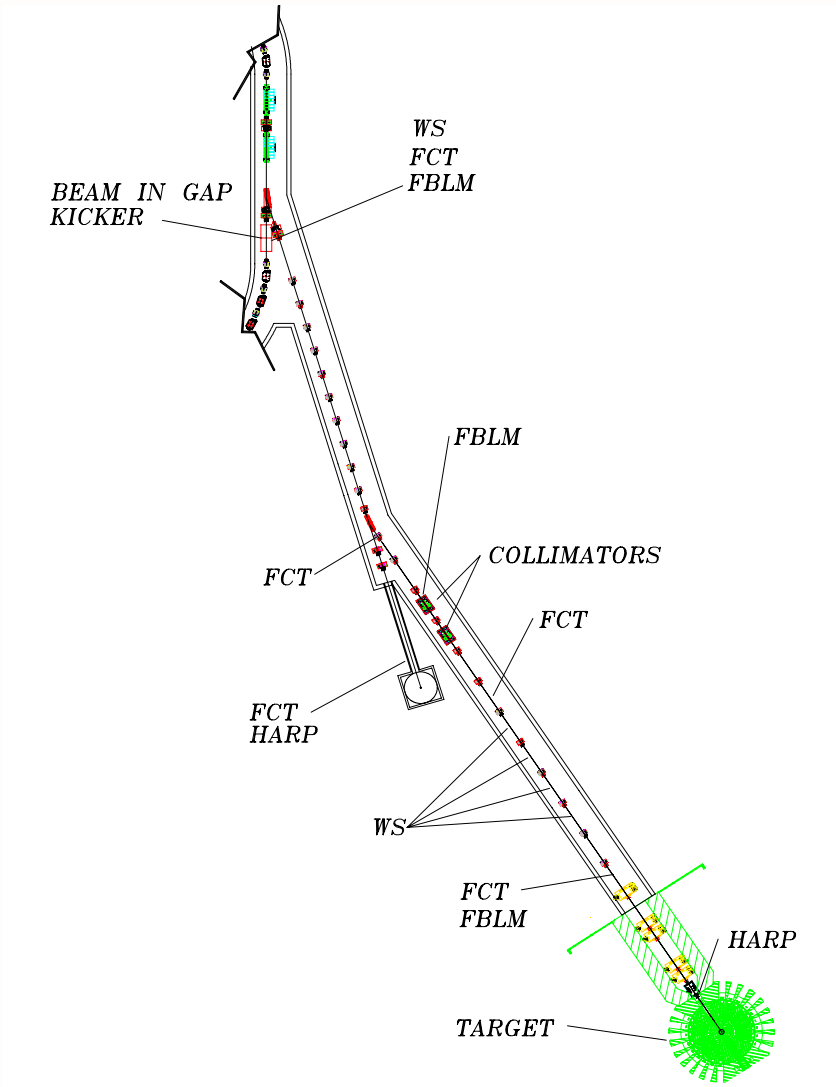

150 meters

BLM Location	Quantity
Quads	27
Collimators	4
Dump	2
Target	3
Moveable	4

FBLM Location	Quantity
Extraction	1
Collimators	1
Target area	1

SNS BLM Signal Routing Configuration

Electronics located in service buildings.

Linac Diagnostic Racks (every 70 feet)

DTL 3	(6 channels)
CCL 4	(49 channels)
SCL 8	(64 channels)

HEBT	Service Building	55 channels
RING	Center Building	87 channels
RTBT	Service Building	43 channels

Each location will have one or more front end computers through which BLM's will communicate with the Permit Link and high level controls system.

Design Number Calculations

10^{-4} Loss of $2x10^{14}$ protons = $2x10^{10}$ particles/cycle

$2x10^{10}$ (1.6 X 10^{-19}) = $3.2x10^{-9}$ Coulombs

$3.2x10^{-9}$ C / 248m = $1.29x10^{-11}$ C/m

$1.29x10^{-11}$C/m (60/sec) = 0.77 nA/m

0.77 nA/m (1 GeV) = 0.77 W/m (was 0.95 W/m for 200 meter ring)

Linac CDR states this will produce (simulation) an <u>average</u> of 115 Rad/hr at 28 cm

Ion Chamber Loss Detectors

Ion Chambers - Glass bottle

Evolution: Tevatron

RHIC

SNS

- 725 mm of Argon, 113 cc volume, 2 KV bias.
- Response 70 nC/Rad, about 20 pA/Rad/hr.
- Individual Calibrations, 95% within +/- 5%.

RHIC Ion Chamber BLM Detector

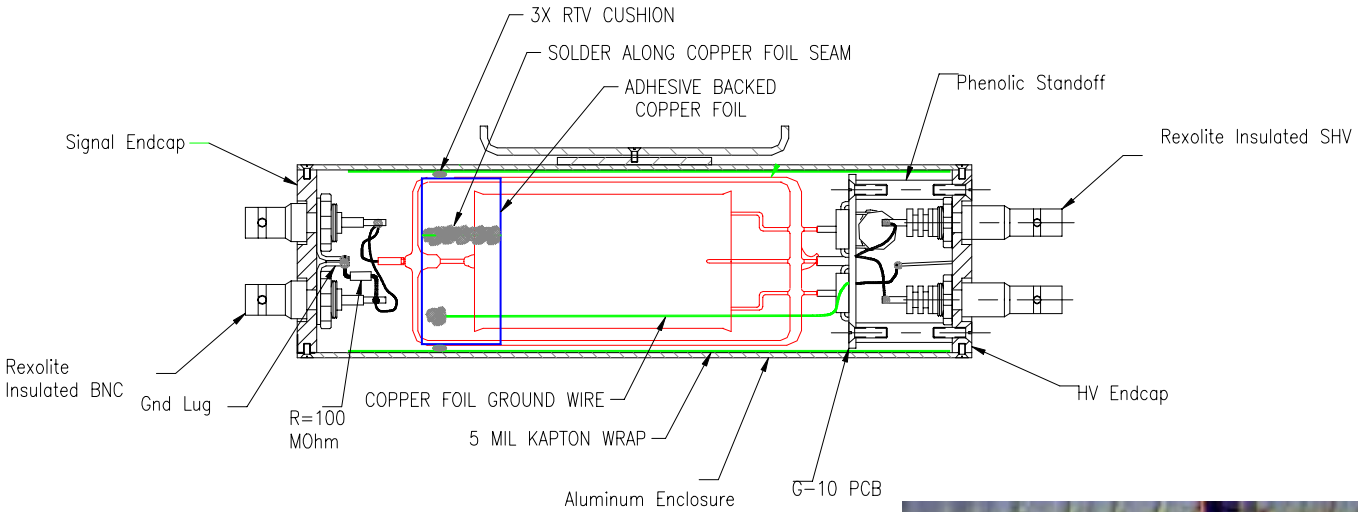

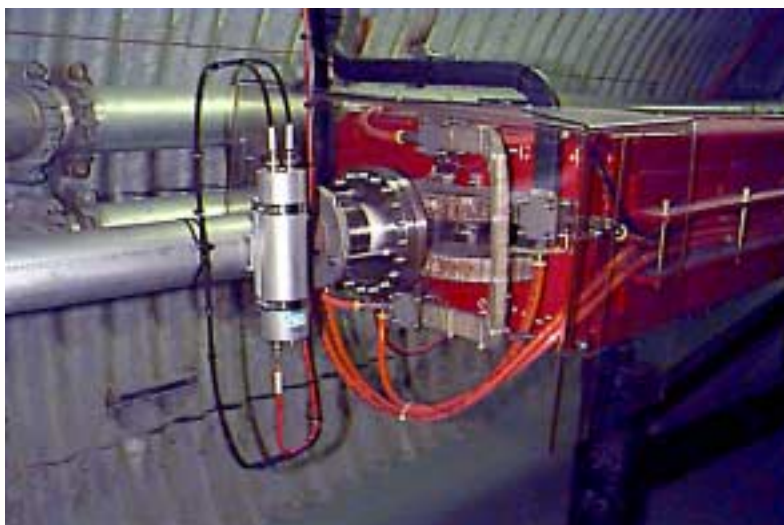

Ion Chamber Dynamic Range – Low

Low Level/High Resolution

To measure long term losses to meet the 1 W/m criterion corresponds to several decades of range below 10^{-4} beam loss over full ring averaged over one second.

1 W/m produces 115Rad/hr at 28 cm,

(noise floor at 10Hz BW = 10pA)

Equivalent to 530mRad during the 1 msec beam on pulse,

BLM response 70 nA/Rad/sec

Yeilds 37 nA during the 1 msec pulse for 1 W/m loss.

In Ring, expect 5 times more signal due to majority of losses at quads (248m/52)

Linac DTL expect about 8 times lower signal at 100 MeV

Ion Chamber Dynamic Range - High

Fast Response for Beam Abort (electrons only)

For 10us rise time, BW would be 35 kHz. (550 pA noise)

This reduces resolution to 30 Rad/hr

Intention is to observe large fast losses 10^4 – 10^6 Rad/hr

Upper Limit

Tests at LANL indicate similar Ion Chambers "start to saturate" for a dose of 2 Rads in about 2us. (For signal current comparison extrapolate to 10^6 R/sec.)

Mike Plum paper from '89 PAC shows data which indicates 18% error for this pulse and 0% for ¼ this dose.

Considering only (fast) electron collection:

0.25×10^6 Rads/sec x (70nA/Rad/sec)/2 = 8.75 mA

Compare to the 37 nA for 1 W/m loss

Liquid Cell/Photo-Multiplier Loss Monitor

Features

- **Rise Time ~2nS**
- **Installed at injection, extraction, ring bends & straight section ends.**

Detector

- **Available commercially from Bicron (MAB, using BC-505)**
- **1,2,4 Trimethybenzene, Hamamatsu 2060 PMT, 10 stage.**

Signals

- **Instabilities**
- **Kicker errors**
- **Momentum errors**
- **Losses within bunch**
  - **Signals buffered and sent through wideband mux to fast digitizer (1 Gs/s).**
  - **Signal integrated over bunch duration, read out via fast digitizer clocked revolution frequency.**

FBLM - Liquid Cell & Photo Multiplier

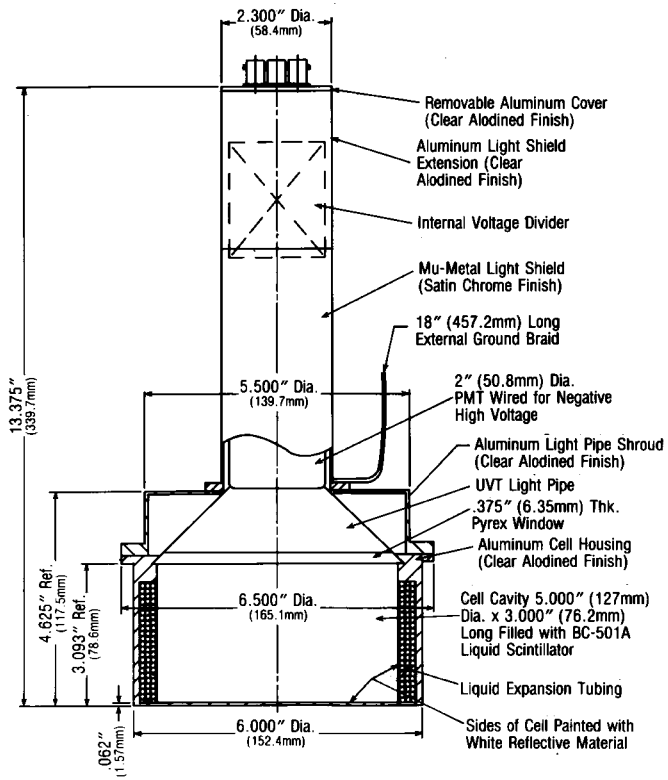

SNS BLM Analog/Digital Front End

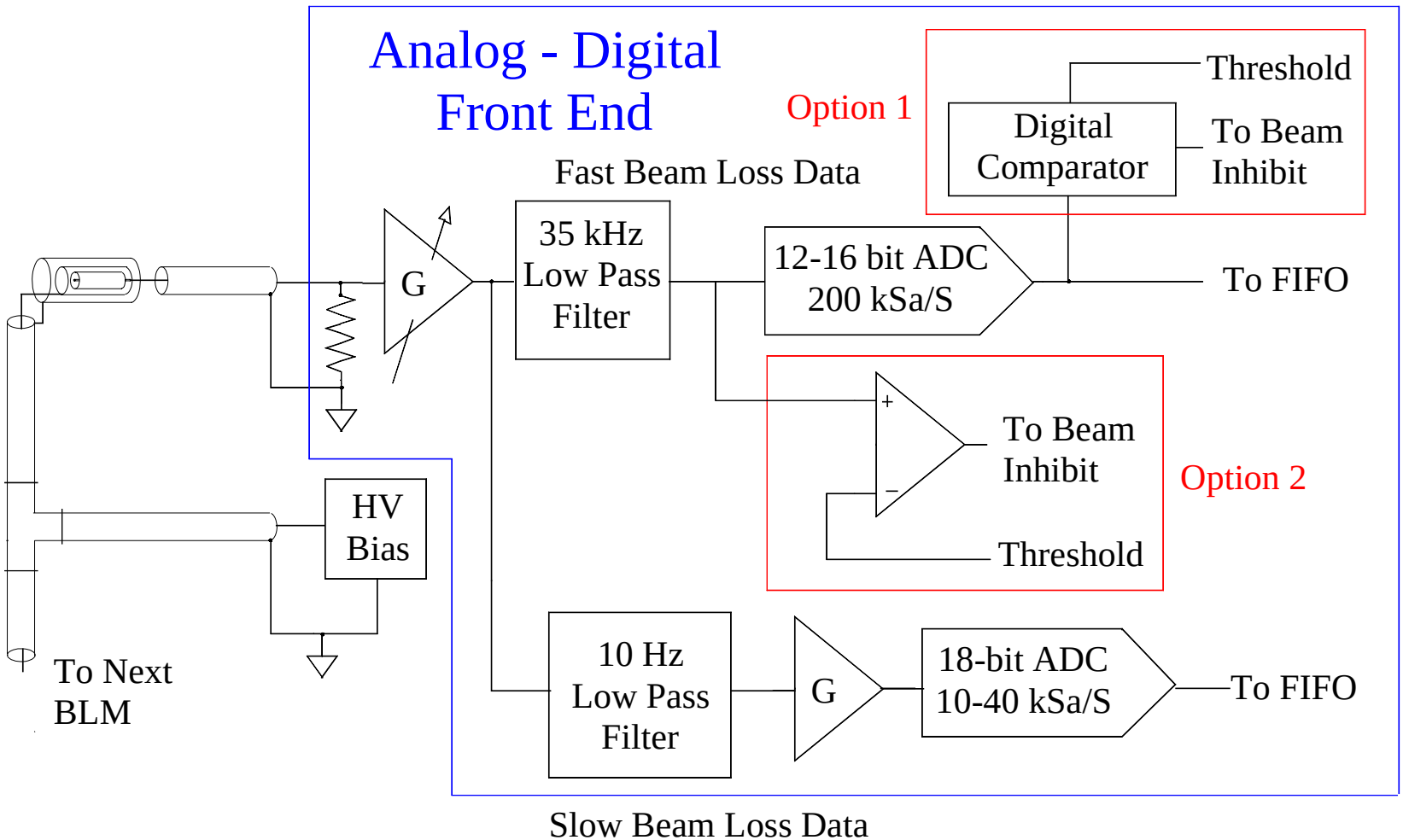

Data Acquisition

IC BLM's

- **Fast - Sample every 5 us/cycle upon request from each blm, digitized 14 bits, 200 KS/s = 400 samples/cycle/blm. (BLM data acquisition cycle 2 ms long).**
- **Slow – Sample every 50 us, 18 bit ADC.**
- **Highest concentration in the Ring, 75 blm's, configured into 3 chassis which are cabled to interleave blm's so any one chassis can be taken down and we still have reasonable blm coverage.**
- **Assume 1 K byte data/blm/cycle, 25 blm's/chassis at 60 times a second, yields about 1.5 Mbytes/sec maximum transferred internal data rate per chassis.**

Data Structure

- **Gain and calibration data folded into resolved data.**
- **"Scope trace" type data from each BLM on demand from high level.**
- **Sliding 1 second average for each BLM for comparison to 1 W/m criteria.**
- **Summation of all BLM signals to compare to the 10^{-4} uncontrolled loss criteria.**

FBLM's

- **1 point/ns (1 GS/s, 8 bits)**
- **Controls supplied Fast ADC.**
- **Data transferred to high level via Channel Access.**

Beam Loss Waterfall

RHIC BLM data

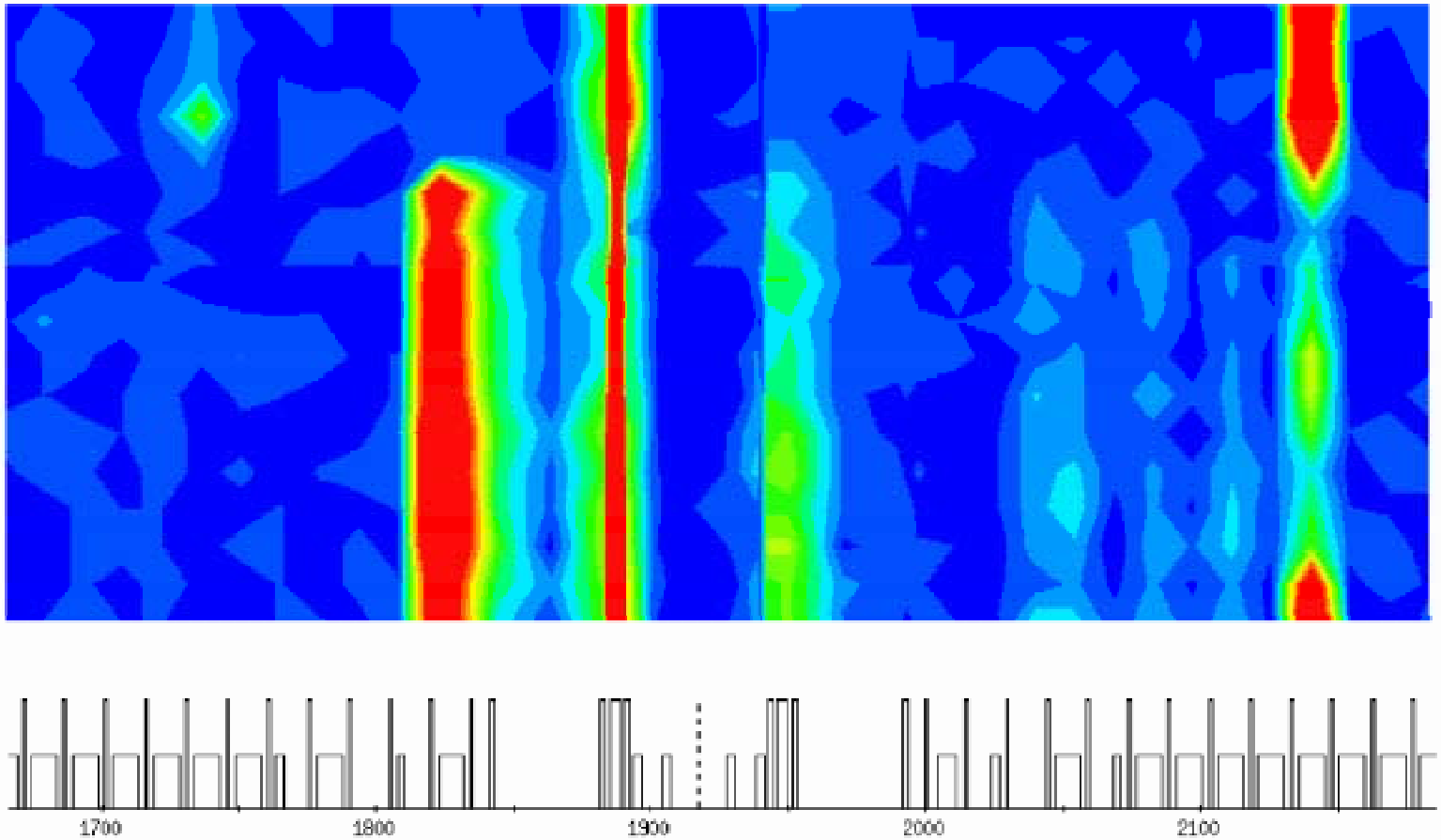

SNS Beam Loss Monitor

SNS BLM System - Summary

- We are in the preliminary design stage.
- Expected signals are well within the range of the proposed detectors.
- Electronics will be designed to measure high level losses over a few turns, as well as low level losses over several cycles.
- Integrated signal (weighted) sum over all detectors to compare with the 1W/m criteria.
- Every channel has adjustable thresholds and masks for the Beam Abort System.