SNS Diagnostic Review
BCM System
Final Design Review (May 29,2001)

Martin Kesselman

12-14-00 and 12-15-00

BCM Schedule for MEBT

Activity Description	Early Start	Early Finish
1.0 Spallation Neutron Source Project		
1.5 Ring and Transport System		
1.5.7 Ring Systems Diagnostics Instrumentation		
1.5.7.4 Beam Current Monitor [BCM]		
1.05.07.04.01		
MEBT B C M Prelim Design	01AUG00A	29DEC00
MEBT B C M Prototype Test (@ AGS)	02JAN01	30MAR01
MEBT B C M Detail Design	01AUG00A	09APR01
MEBT B C M Procure/Fab/Assy	01DEC00	31MAY01
MEBT B C M Test	01DEC00	29JUN01
MEBT B C M Install	01MAY01	31AUG01
MEBT B C M Comp. Test @Site	01AUG01	31OCT01
MEBT B C M - Required by LINAC		01NOV01*

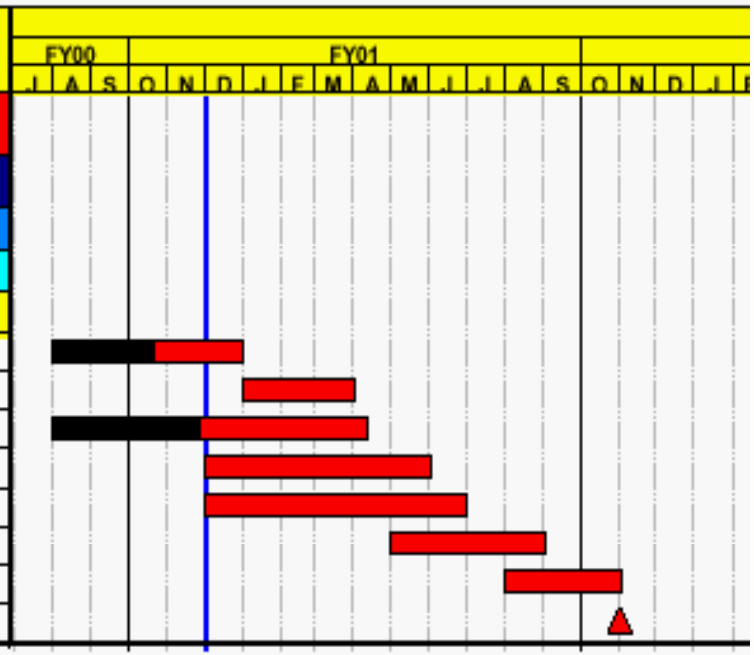

Ring & RTBT BCM Schedule

Activity Description	Early Start	Early Finish
1.0 Spallation Neutron Source Project		
1.5 Ring and Transport System		
1.5.7 Ring Systems Diagnostics Instrumentation		
1.5.7.4 Beam Current Monitor [BCM]		
B C M F D R	29MAY01	
B C M Detail Design (FY01)	01DEC00	28SEP01
B C M Detail Design (FY02)	01OCT01	31OCT02
B C M Procure/Fab/Assy	10JUN02	20JAN04
B C M Test	28AUG03	20JUL04
B C M Deliver to Site	21JUL04	
B C M Install - LINAC	15APR04	17JUN04
B C M Install - HEBT	11JUN04	16AUG04
B C M Install - RING	21JUL04	22SEP04
B C M Install - RTBT	21JUL04	22SEP04
B C M Installation Compl		22SEP04
B C M Comp. Test @ Site - LINAC	15JUL04	29SEP04
B C M Comp. Test @ Site - HEBT	17AUG04	01NOV04
B C M Comp. Test @ Site - RING	23SEP04	10DEC04
B C M Comp. Test @ Site - RTBT	23SEP04	10DEC04

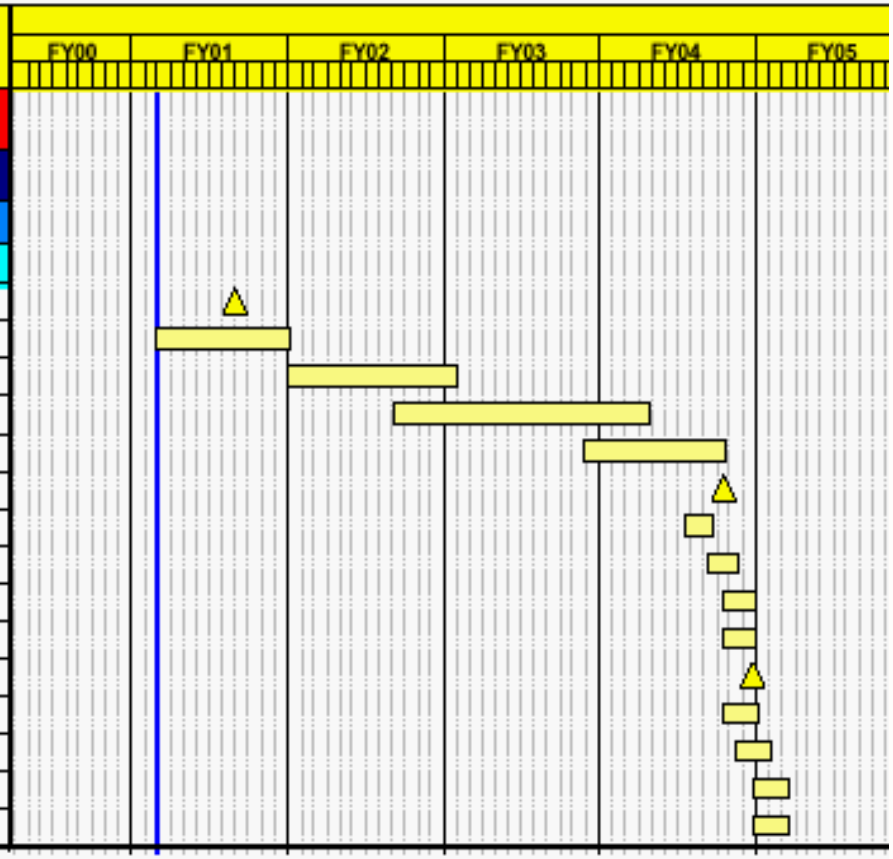

SNS DESIGN PARAMETERS

- Energy……..1 GeV
- Intensity……..……. 2 x 10^{14} protons
- Repetition Rate…….....60 Hz
- Number of Bunches…..……... 1
- Injection duration……. 1.0 msec
- Revolution Period…….…. 945 nsec
- Bunch Length……... 695 nsec
- Number of turns……. 1060

BCM Requirements

From SNS Diagnostics AP Requirements (10/20/00)

- MEBT to HEBT 0.3 - 1000 us,
  - 15 to 52mA
  - Accuracy < 1% of gain Range
  - Resolution 0.1% of reading
  - Detail within mini-pulse- available on demand
- Ring to RTBT 5e10 to 2e14 Protons
  - 0.015A to 100A
  - Accuracy < 1% of gain Range
  - Resolution 0.1% of reading
  - Turn-by-turn data- available on demand
  - Interpretation of requirements

Status and Goals

- Prototype driven by MEBT schedule
- MEBT transformers are in-house
- Ring prototype transformer is awaiting delivery
- MEBT electronics are straight forward
  - single gain, amplifiers have been breadboarded
  - ADC Eval Kit shows AD6644 works as advertised
- Schematics are being prepared
- Goals:
  - Hardware in Spring
  - Prototype for MEBT in Summer

Beam Current Monitor Distribution

LOCATION	DIAM.	NUMBER OF BCMS
Front End	5.5cm ID 13.5cm OD	2
Linac	2.5cm,3.0cm, 8cm* ID * not finalized	DTL=6 CCL=2 SCL=6
HEBT	13cm ID	5
Ring	22cm ID	1
RTBT	22cm ID	5

SNS Ring Beam Current Readout

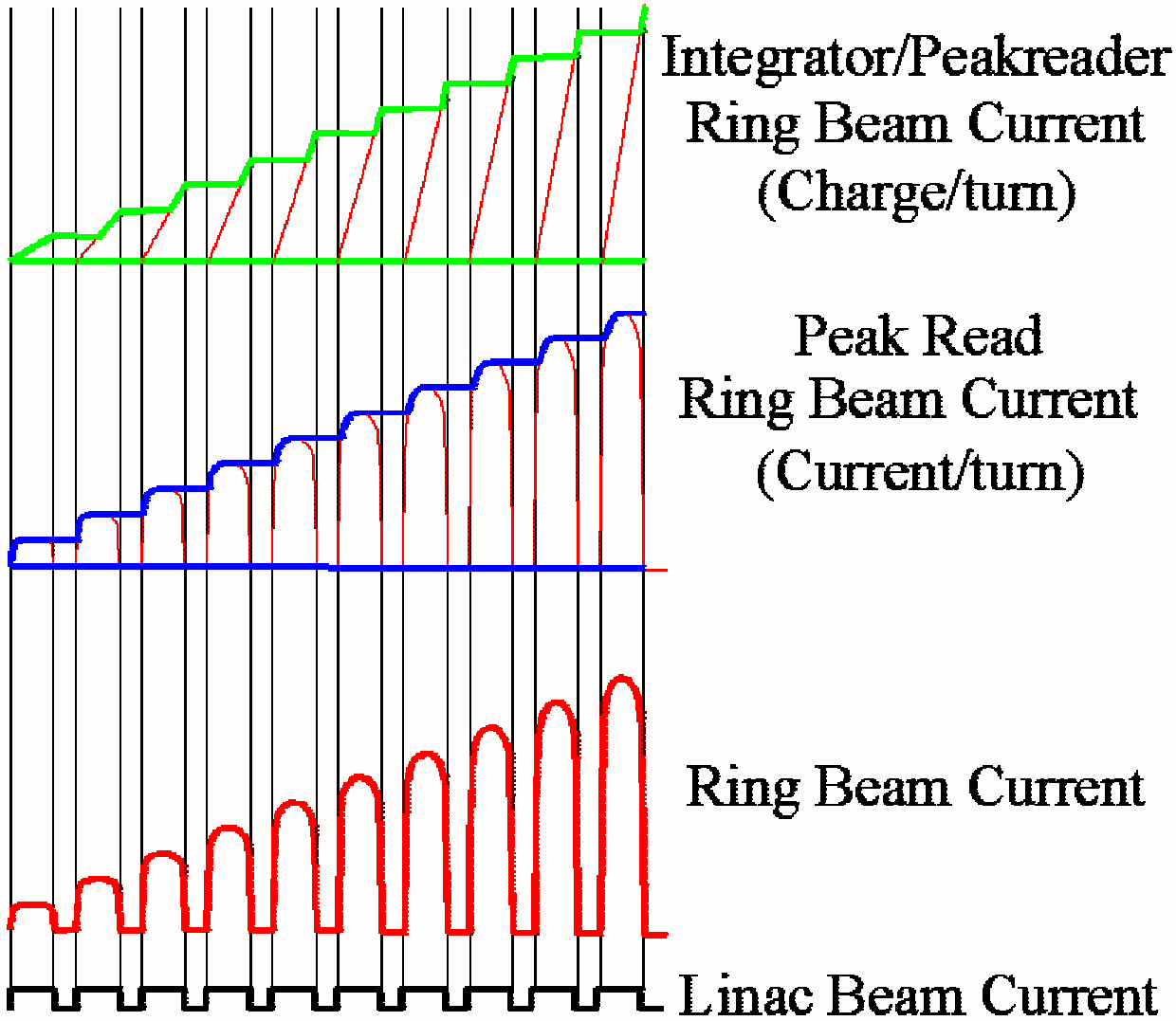

Droop in Current Transformer Signals

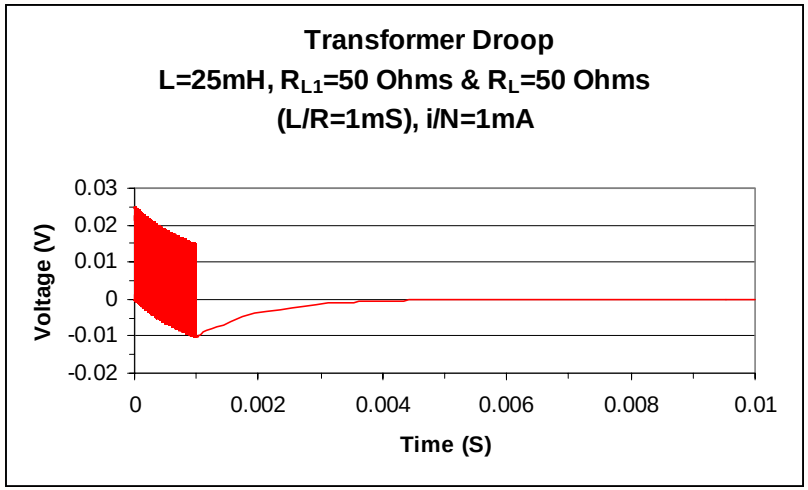

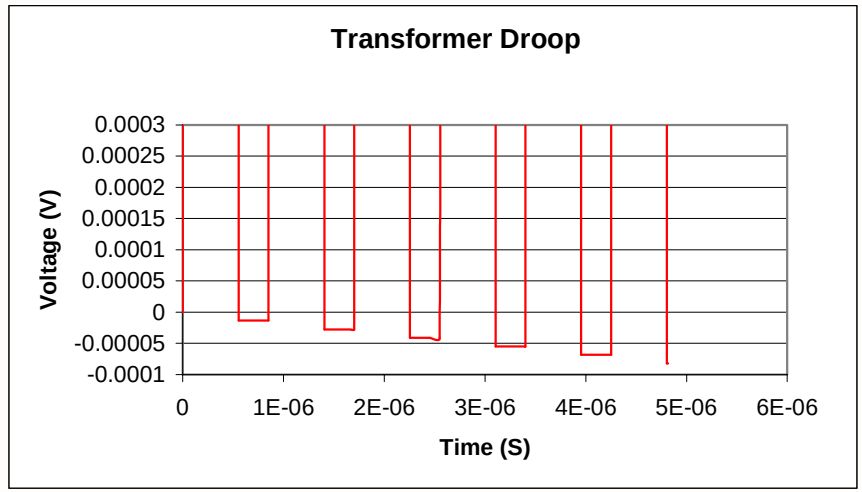

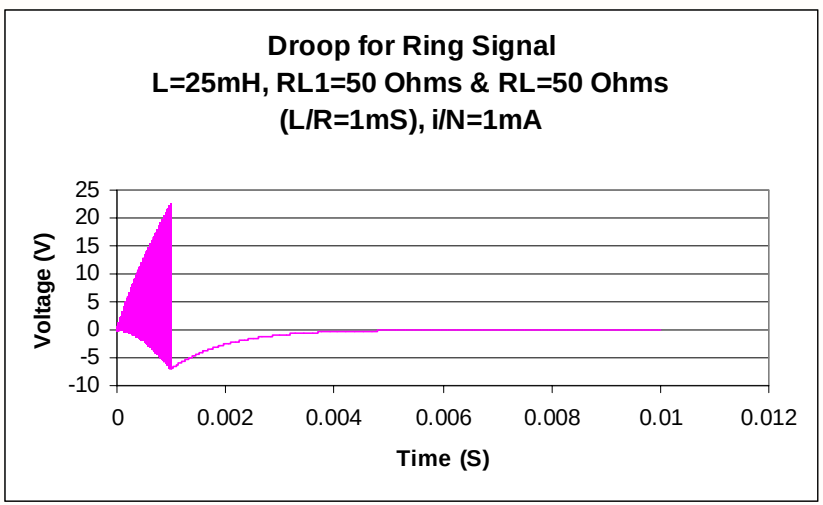

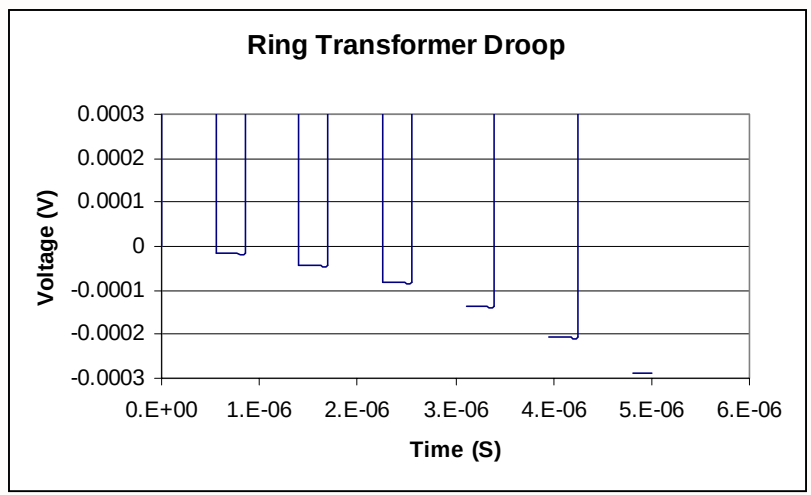

Signal Conditioning

- Basic approach is to digitize as-soon-as practical and do all signal conditioning digitally.

- Provision for “fast mini” and “slower macro” pulse digitization will be accomplished with different digitizers.

Base-line Restoration

- Examining the base-line during the “gap” time, and subtracting this value from the next mini-pulse height restores the base-line to zero, and compensates for droop to a first order approximation.
- Each turn gap signal is averaged and stored for subtraction from the pulse during the next turn.
- Alternatively, an algorithm that will compensate for the droop can be used.

General BCM Signal Processing

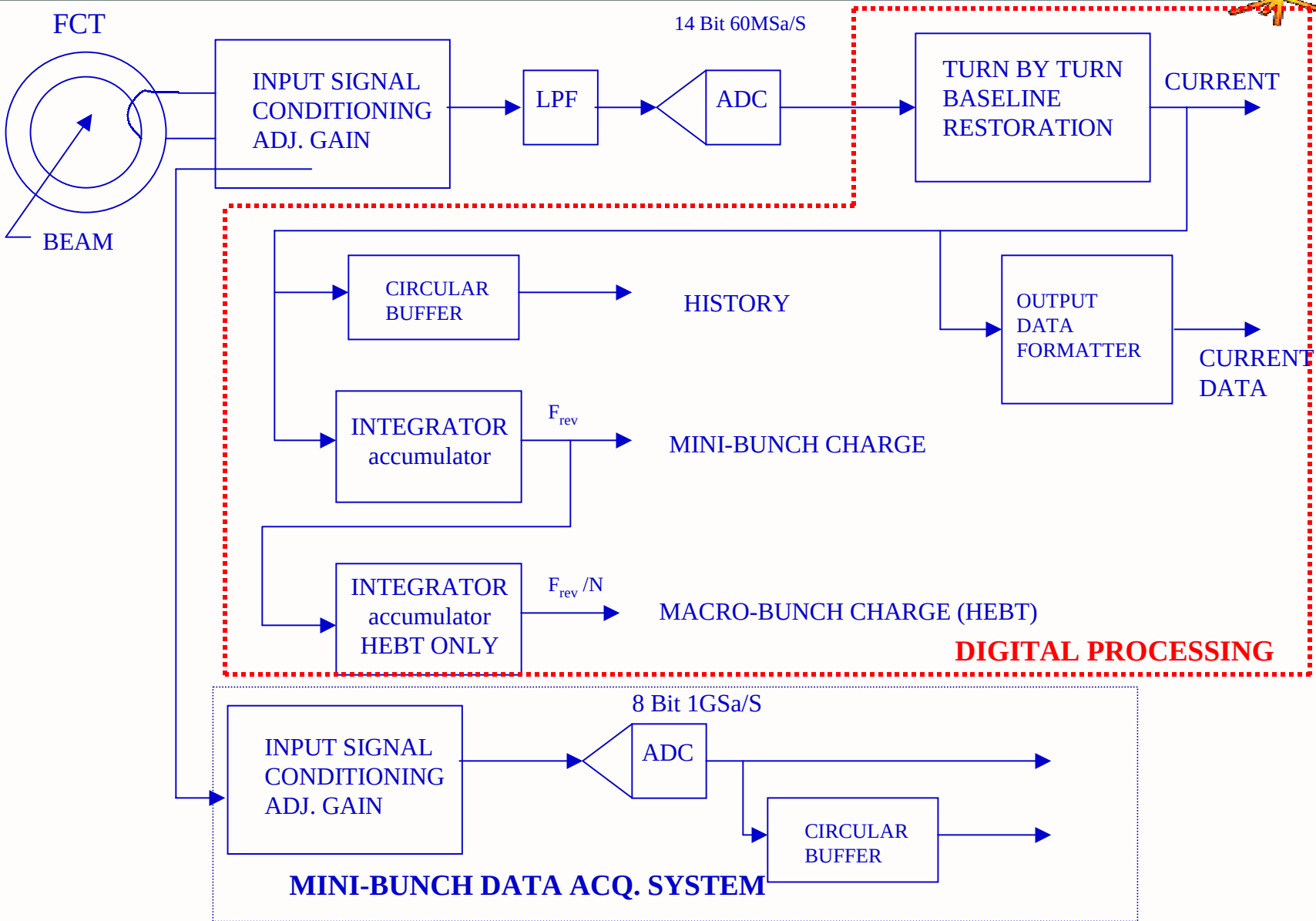

MEBT/Linac/HEBT Analog Front End & Digitizer Block Diagram

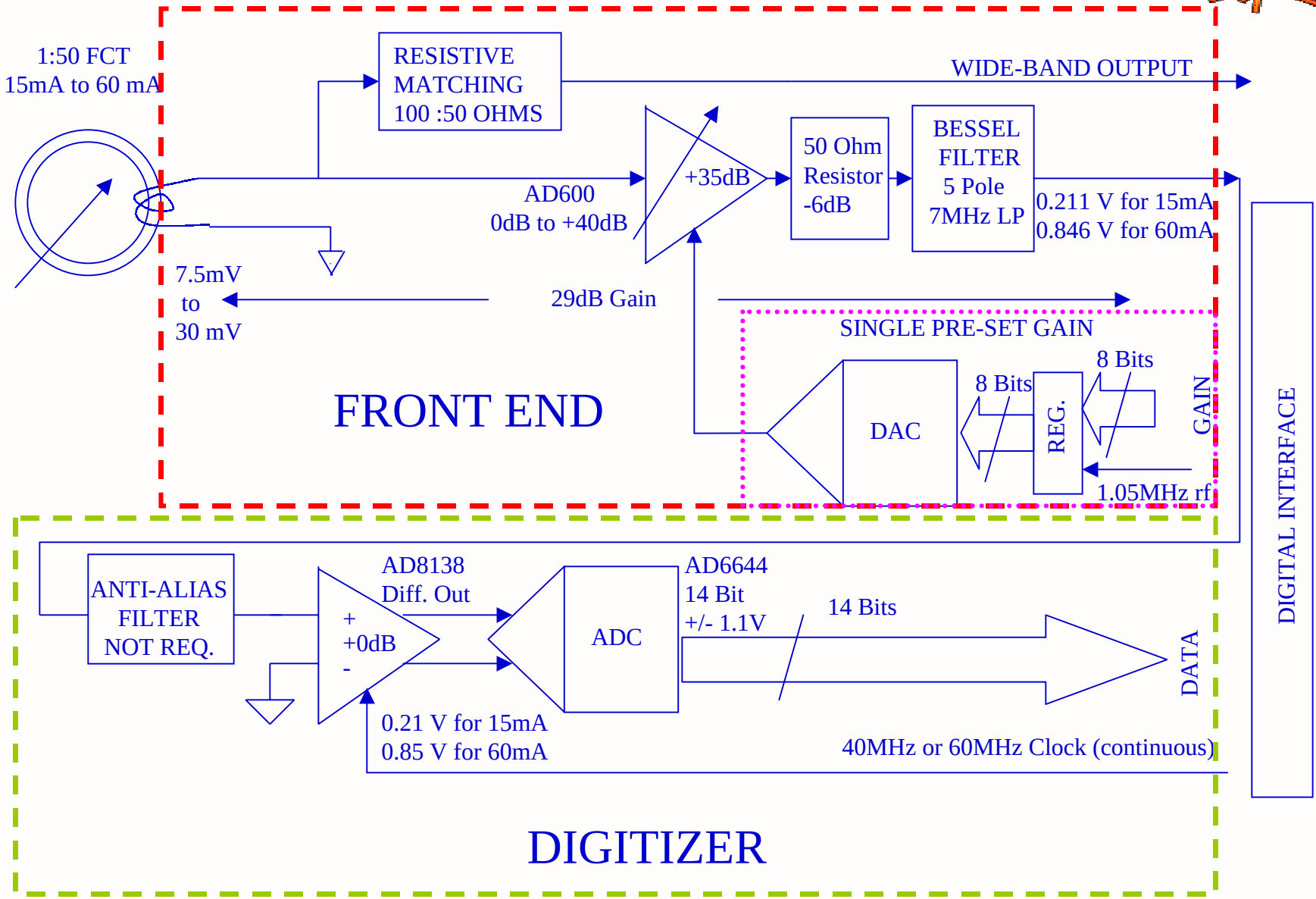

Using FCT for HEBT Averaging BCM

Estimated Total Input Noise for a 7MHz BW= 13uV (doubled) FCT with 1:50 Turns Ratio

Beam Current	Est. Input Signal	Gain	Estimated Output Noise 2*G(Equiv. Input noise of 6.5uV)	Output Voltage	Resolution AD6644 Vn=200uV 14Bit ADC (1Vpk)
15ma	7.5mV	28	0.415mV	0.21	.2%
50ma	25mV	28	0.415mV	0.7	0.06%
60ma	30mV	28	0.415mV	0.84	0.05%

Analog-Digital Partitioning

- Presently, prototyping of other diagnostics is taking place at both LBNL and LANL.
- To use these efforts to advantage, the present prototyping configuration will be partitioned to permit the use of a digital interface under development at LANL.
- Can employ separate boards, or grouping Analog front end with digitizer.

BCM & BPM Partitioning Options

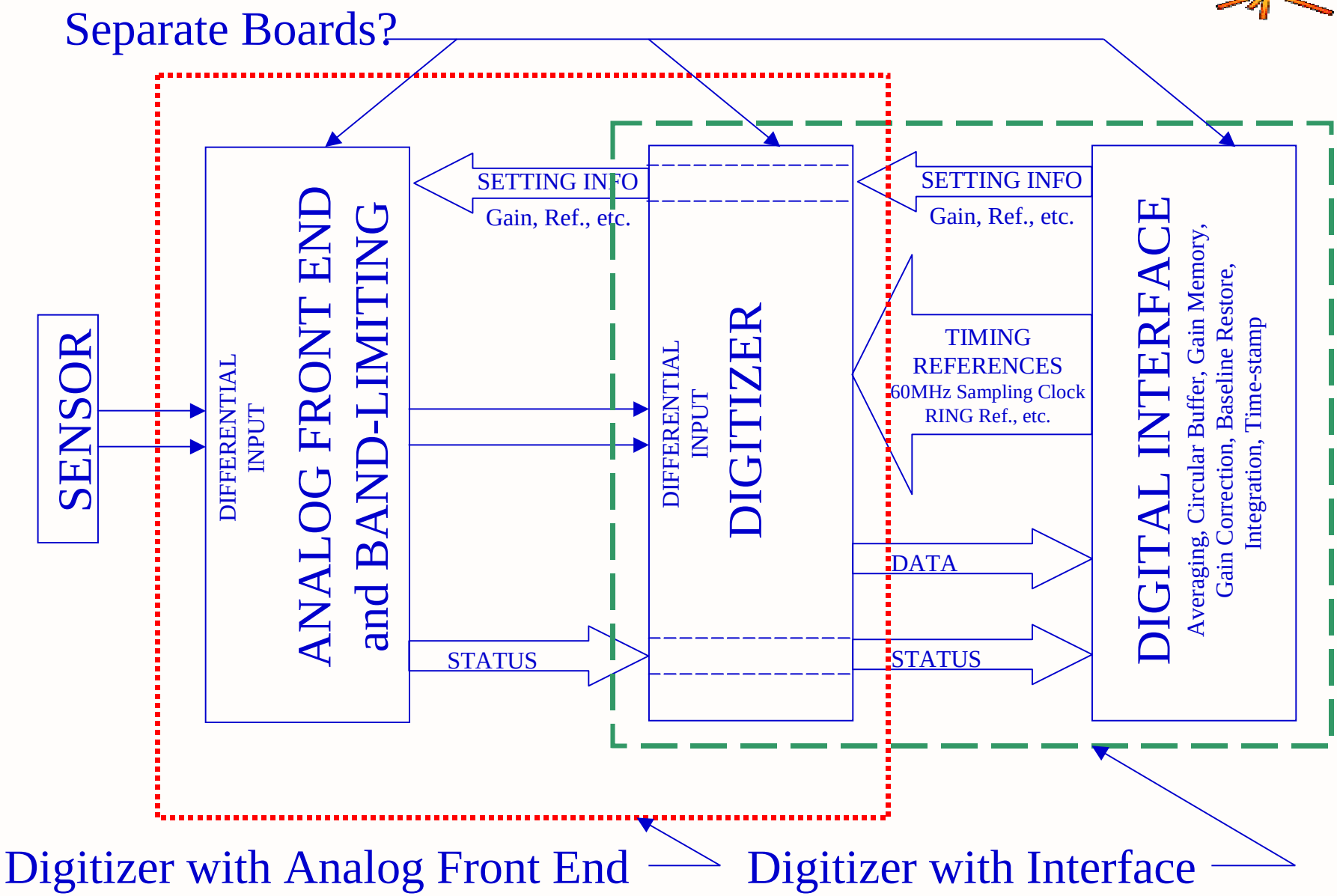

Ring Large Dynamic Range Considerations

- Requires switched gains (loss of one turn data during switching is acceptable)
- Signals will be large (50 Volts peak for 100 Amps)
  - amplifiers require protection
  - solid state switches must handle the voltage

Ring BCM Protected Pre-Amp Concept

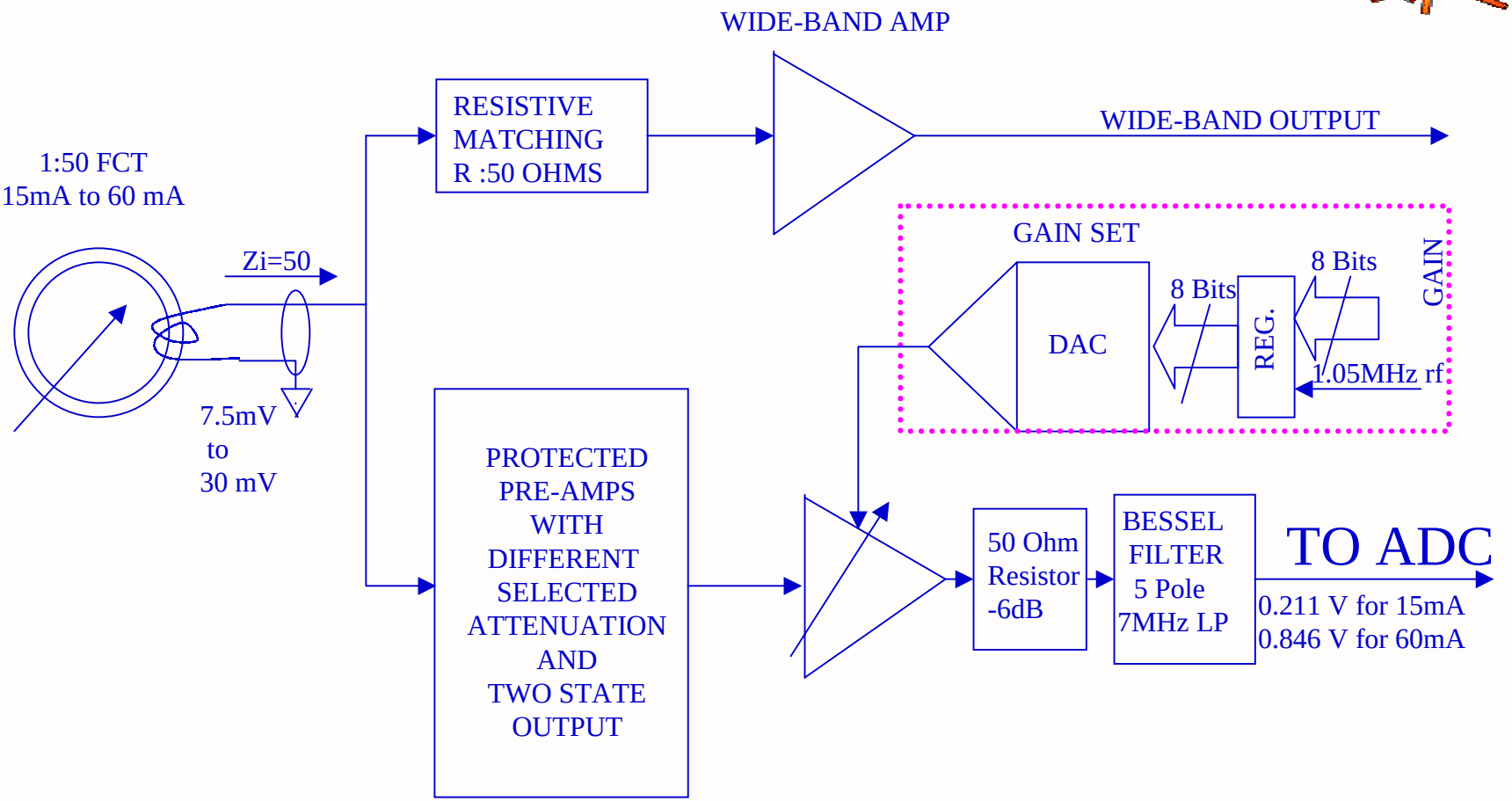

Criteria for Ring Gain Selection

- Achieve linearity to 100 Amps
- Achieve 0.1% resolution, assume ADC noise is -74dBV (200uV)
- Let 50 Amps correspond to 25 Volts at transformer output when terminated in 50 Ohms, and 0.5 volt (1/2 scale) at ADC.
- Minimum signal to ADC should be about 0.2 volts for 0.1% resolution
- Signal ratio required before a gain change is 2.5(based on 50mA signal).

Gain selection for 0.1% Resolution

- Number of gain changes required to handle 1000:1 ratio is:

$$n=3/\log(2.5)=7.5$$

- Can use 7 to 8 gain changes with about 2.5:1 ratios

Using FCT for RTBT Averaging BCM

Estimated Total Input Noise for a 7MHz BW= 13uV (doubled)
FCT with 1:50 Turns Ratio

Turns	Beam Current @ 50ma per turn	Est. Input Signal	Gain	Estimated Output Noise 2*G(Equiv. Input noise of 6.5uV)	Output Voltage	Resolution AD6644 Vn=200uV 14Bit ADC (1Vpk)
Test	15ma	7.5mV	28	0.415mV	0.21	0.2%
1	50ma	25mV	28	0.415mV	0.70	0.06%
1000	50A	25V	0.02 -36+2.02dB	0.200mV	0.500	0.027%

Testing

- To test transformers two test fixtures have been built.
- Fixtures were prepared from 3-1/8 & 8 inch 50 Ohm coax, with a break placed in the shield. A shroud carries the wall currents around the transformer.
- This accommodates changing transformers quickly.

BCM Testing Fixture

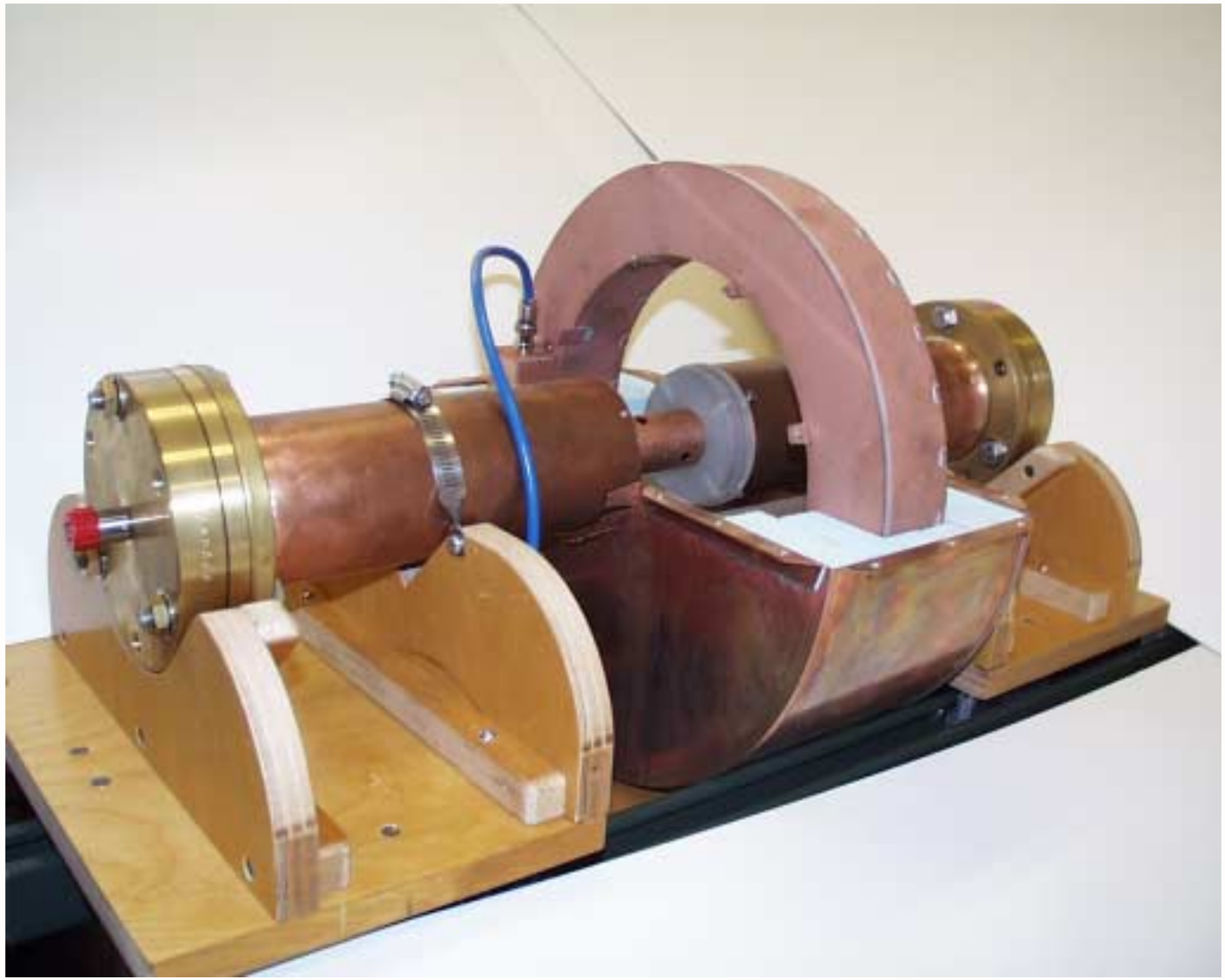

CALIBRATION

- **ICT to measure the calibration signal.**
  - **Each FCT has a built in 10 turn calibration coil. Allows for calibration (a sample transformer passes a 700ns pulse with 50ns rise time).**
  - **Bergoz has designed the 10 turn calibration coil for best coupling, and the ability to simulate large currents.**

Conclusions

- Focusing on digitizing as-soon-as practical
- Use two different digitizers for detailed mini-pulse information, and macro-pulse detail
- Perform base-line restoration, droop compensation & other analysis digitally
- Try to incorporate efforts of partner labs to minimize the design effort.
- Number of gains for Ring is a function of resolution required.