SNS TARGET DESIGN

Beam Diagnostics Meeting

David Lousteau

Task Leader, Target Assembly

Experimental Facilities Division

Oak Ridge, TN

December 14, 2000

Target Shielding and Target Cell

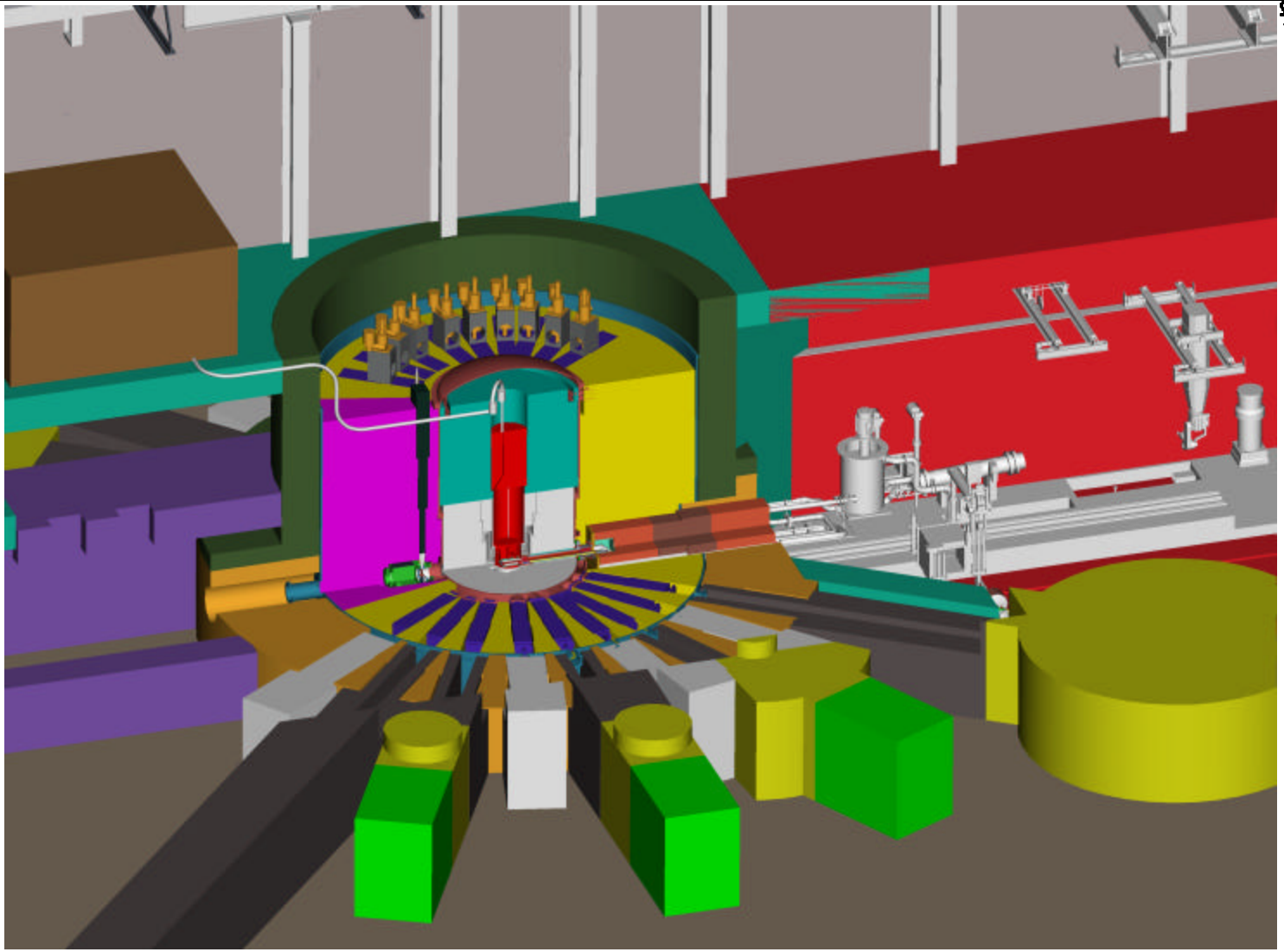

X0000936/arb

Principal Features of SNS Target

- Mercury as target material
  - 1.2 m^3
  - 24 L/s
  - 60 to 90 C
- 316 L Stainless Steel as Structural Material
  - Analyzed as a pressure vessel
  - Material limited to 1200 hrs at full power
- Mercury loop operation and target maintenance done remotely in hot cell

SNS Target Configuration

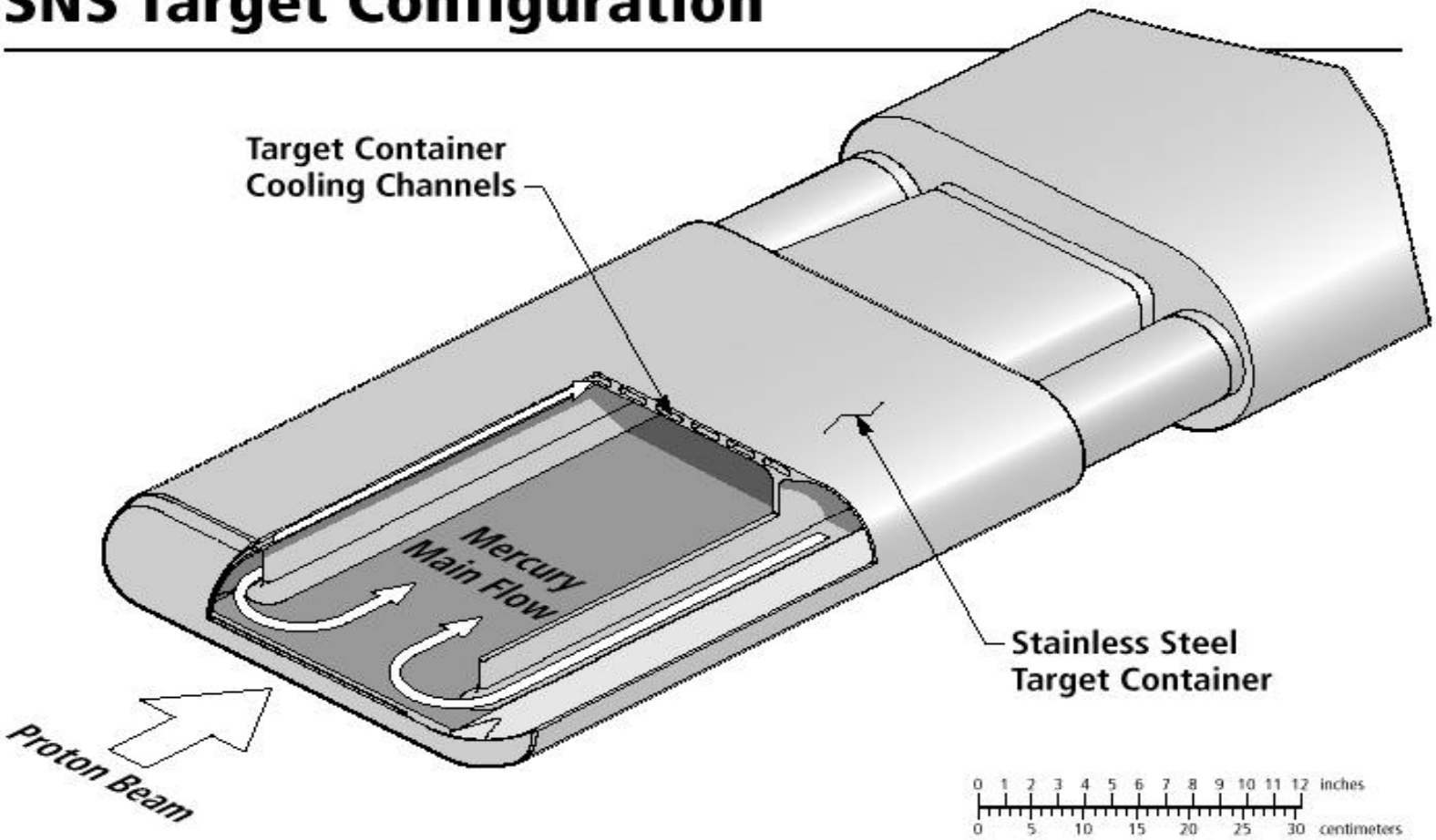

Target Module - Exploded View

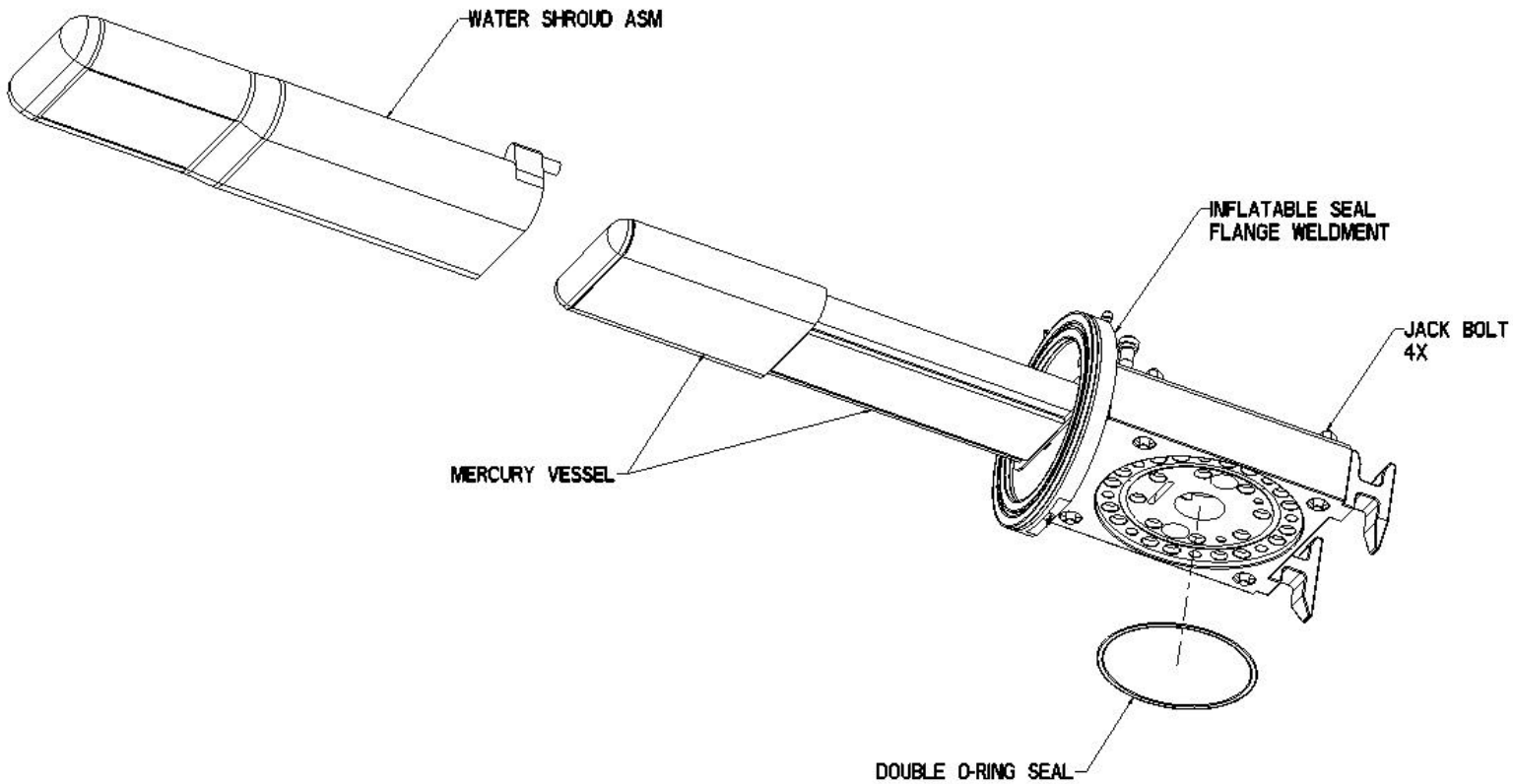

X0000936/arb

Section Through Mercury Target Module

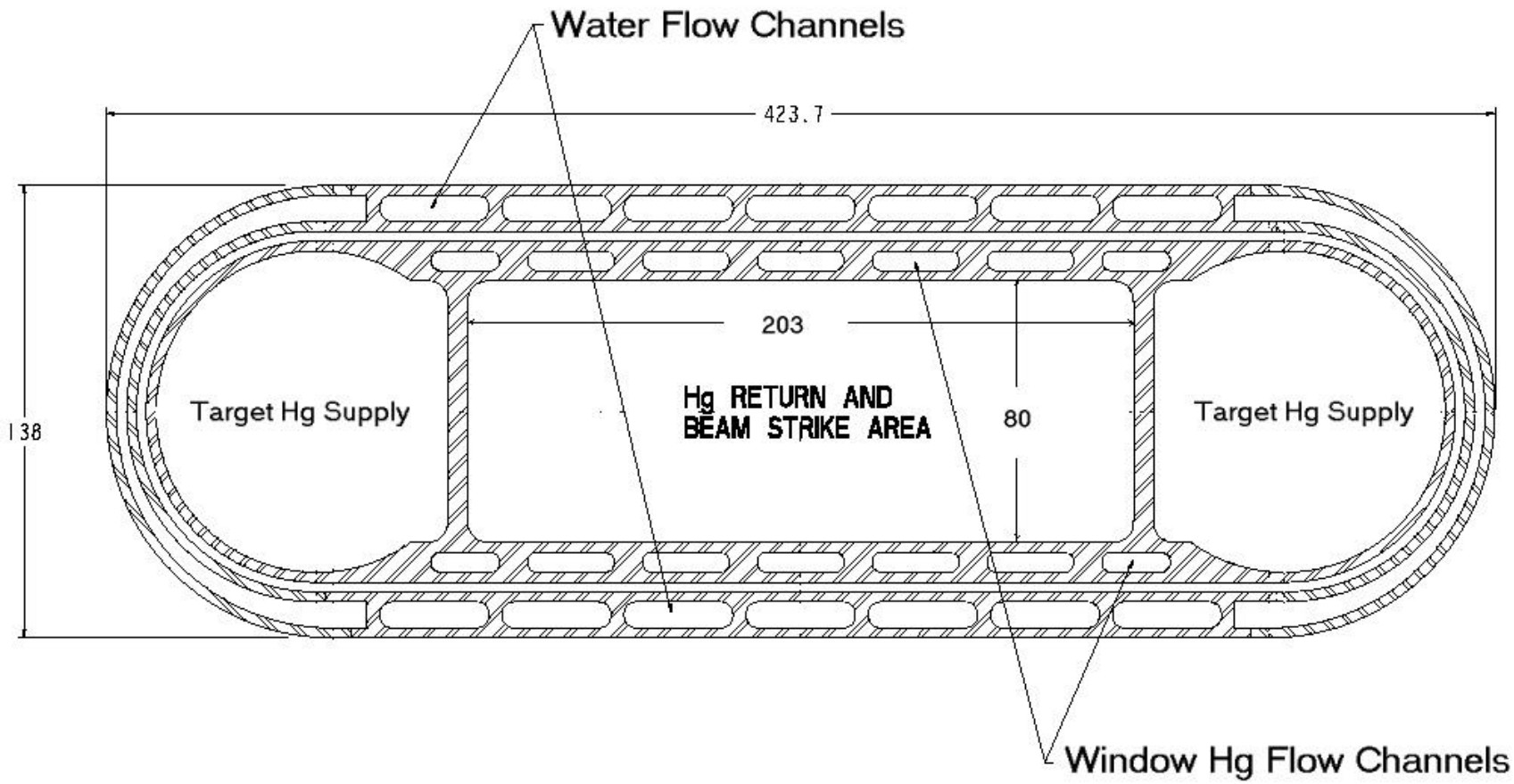

X0000936/arb

Target Beam Window Arrangement

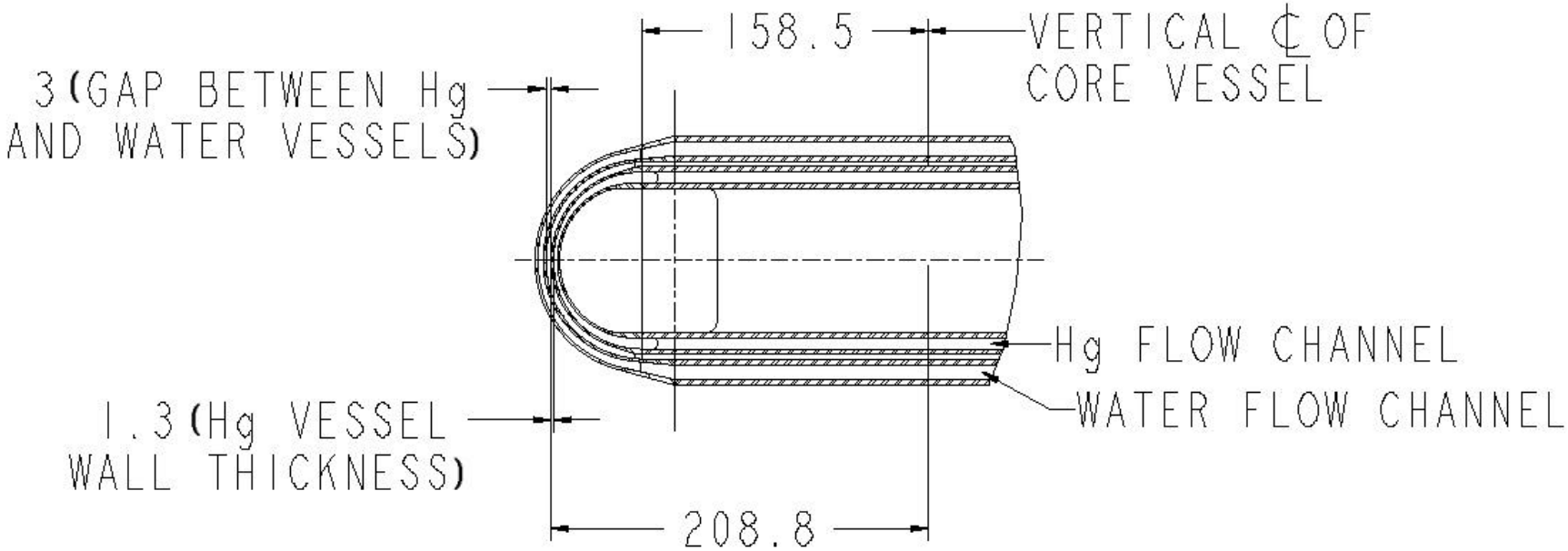

X0000936/arb

Beam-To-Target Controlled Interfaces

- Target Width/Height - 404 X 104 mm
- Beam Width/Height - 200 X 70 mm
  - ***Normally ≥ 90 % of power inside spot***
  - ***Of-normal > 50% of power outside spot for max of 2 pulses***
- Time Average Beam Current Density
  - ***Over spot , Normally = 0.143 A/m^2***
  - ***Peak, Normally ≤ 0.25 A/m^2***
  - ***Peak, Off-normal ≤ 0.28 A/m^2 for 10 seconds***
- Peak Single Pulse Density
  - ***Normally ≤ 2.6 X10^16 protons/m^2***
  - ***Off-normal ≤ 3.2 X 1o^16 protons/m^2 for < 2 pulses***
- Tolerance on Beam Ctr. Line - ± 2 mm Horiz. & Vertical
- Unscheduled Beam Off -
  - > 5 seconds - less than 50 times a day
  - > 5 minutes - less than 10 times a day

X0000936/arb

Temperature Distribution in Target Window Region

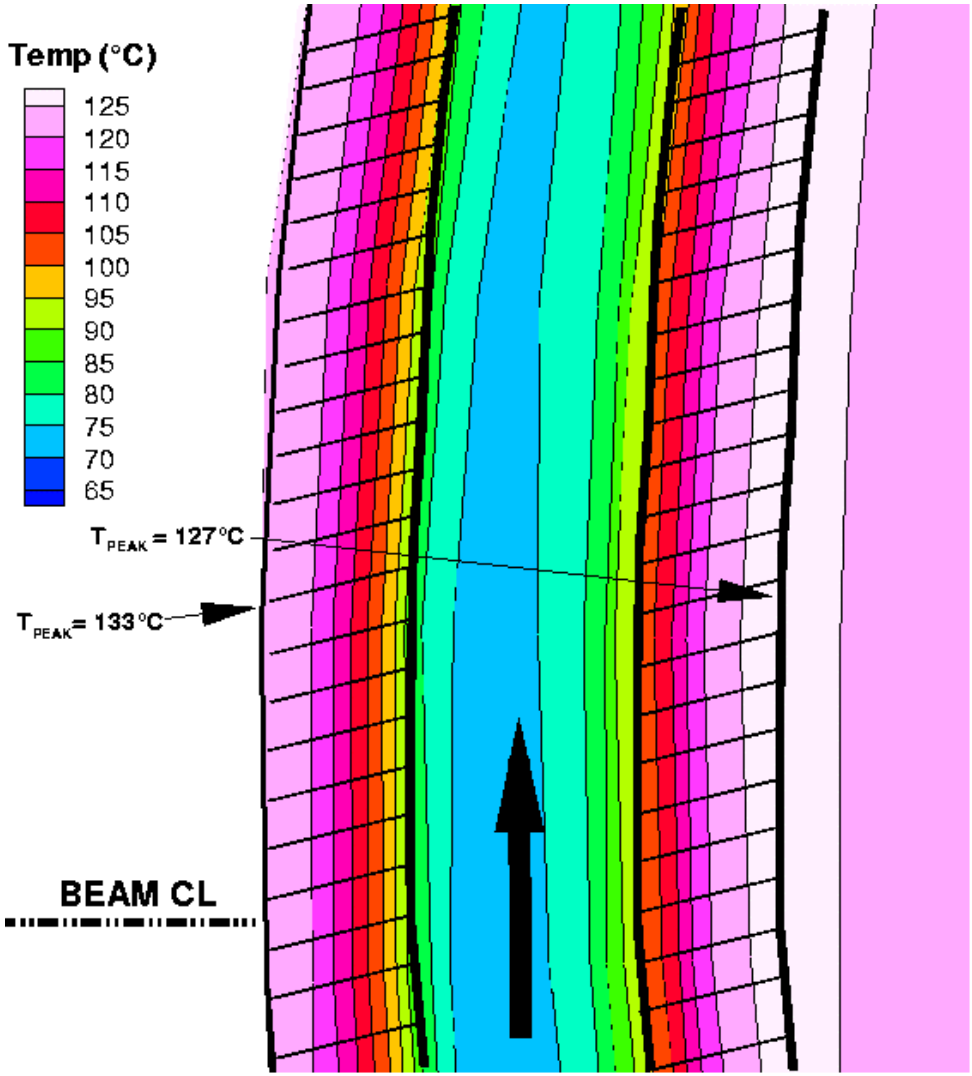

X0000936/arb

Predicted Temperatures in Target

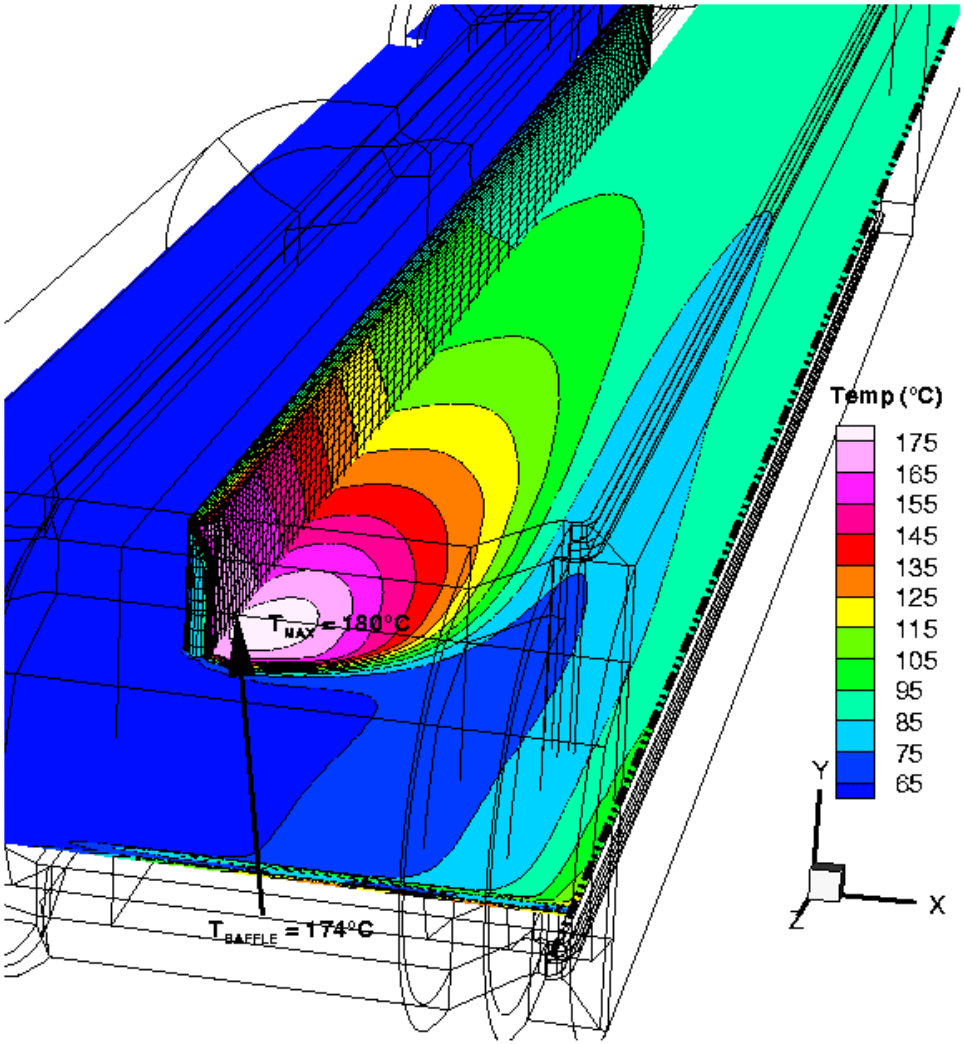

X0000936/arb

Stress Intensity History at Location Maximum Stress

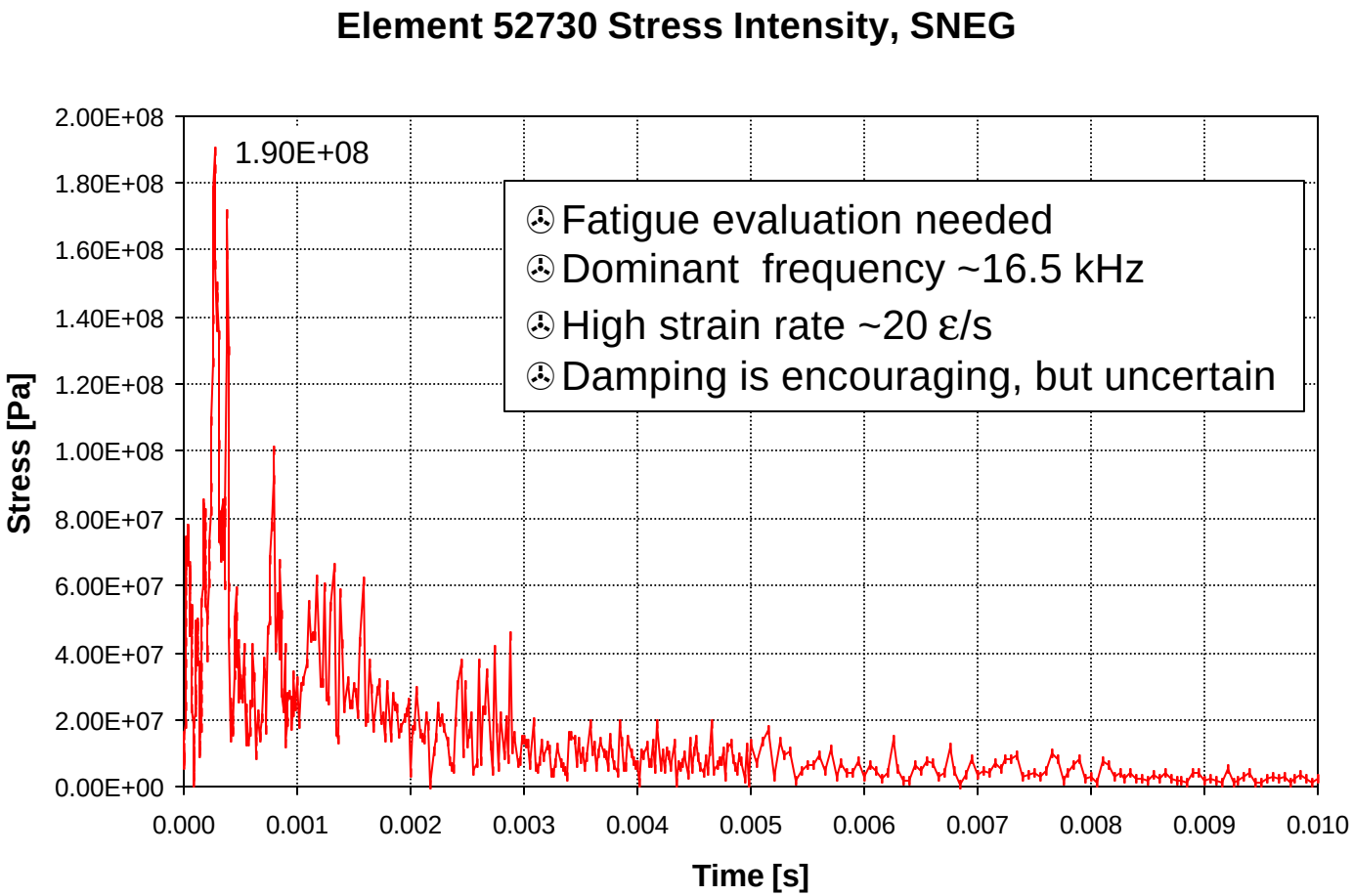

X0000936/arb

Target Stress Evaluation

- Pressure, thermal and thermal shock stresses evaluated against normal service limits as described in Target Module Design Criteria (SNS/TSR-181).
- Stresses combined, on component level, from different FE models (solid / shell).
- Stresses categorized:
  - General membrane (P_m)
  - Local membrane (P_L)
  - Bending (P_b)
  - Dynamic (P_d)
  - Secondary membrane + bending (Q)
  - Peak (F)

cont'd

Results Evaluation
Categories and Limits for Normal Service Limits

Stress Category [Note (1)]	Primary			Dynamic P_d	Secondary Membrane + Bending Q	Peak F
	General Membrane P_m	Local Membrane P_L	Bending P_b			
Description	Average stress across wall to maintain equilibrum with mechanical loads including pressure and gravity. Excludes discontinuities and stress concentrations.	Average stress across wall from pressure and gravity. Considers discontinuities but not stress concentrations.	Linear bending stress caused by pressure and gravity. Excludes discontinuities and stress concentrations.	Reversing dynamic stress produced by proton pulses	Self-equilibrating stress caused by mechanical loads at structural discontinuities or equivalent linear bending stress due to differential expansion. Excludes local stress concentrations.	(1) Local stress concentration (notch). (2) Non-linear portion of thermal stress. (3) Stress due to shock produced by proton pulses

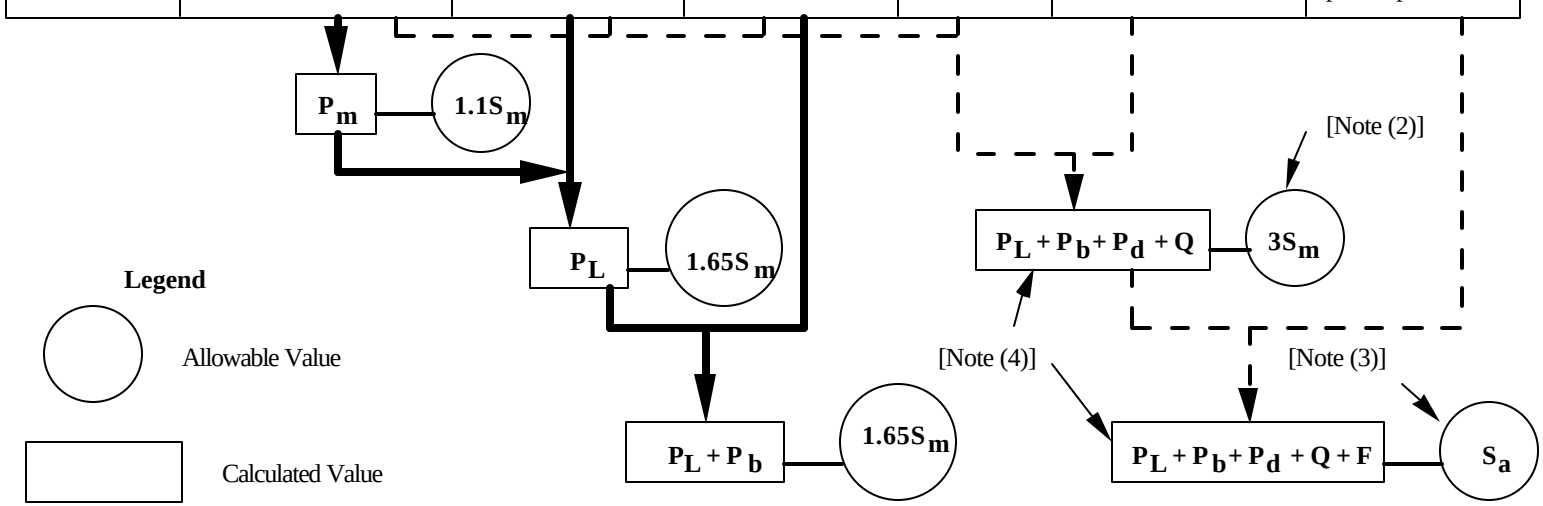

X0000936/arb

- Stress amplitude S_a at target nose location is 113 MPa, including mean stress correction.
- The ASME fatigue design curve for austenitic steels allows for more than 10^{11} at this level.
- Approximately 270 million pulses are expected in a target's lifetime. Even if there were 100 comparable stress peaks per pulse, there is a large margin to allowed number of cycles.
- However a 10% reduction in the design curve would predict failure in far fewer cycles than required in a target lifetime. Also, uncertainty in dynamic stress analysis is considerable.

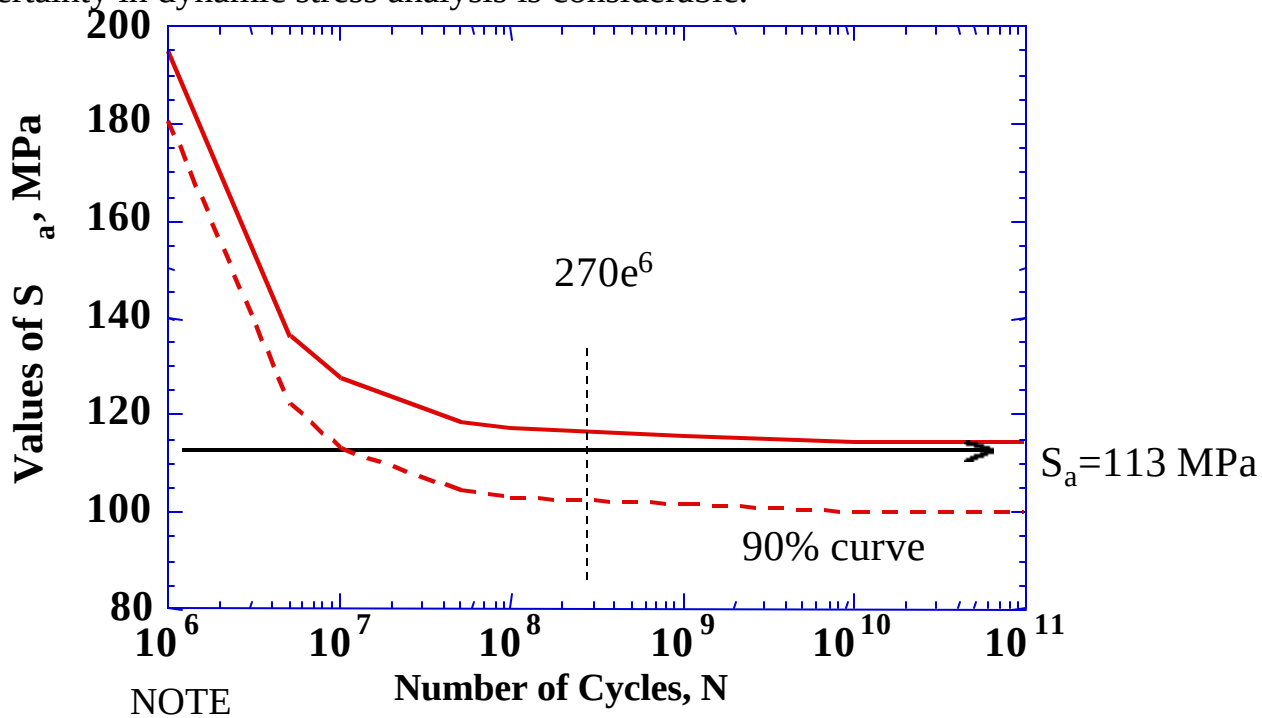

NOTE
E= 195 GPa

X0000936/arb