SNS Harps

Diagnostics Review, Oak Ridge, Dec. 14-15, 2000

by Michael Plum

Outline

- **Schedule**
- **Beam dump harps**
  - Purpose of the harps.
  - Location.
  - Operating conditions.
  - Construction and wire layout.
  - Electronics and cabling.
- **Target harp**
  - Purpose of the harps.
  - Operating conditions.
  - Construction and wire layout.
  - Electronics and cabling.
- **Summary**

Harp systems - schedule

- **We are in the preliminary stages of designing the harp system.**

Beam dump harps – purpose & location

- **Define purpose of the beam dump harps.**
  - Tuning and commissioning.
  - Measure beam size and position to ensure proper beam delivery to the beam dump.
  - Measure beam size to prevent damage to vacuum window due large beam density.
  - Position accuracy +/- 10 mm. *(SNS Parameters List, March 2000, calls for +/- 50 mm position accuracy on dumps.)*
  - Size accuracy ~20% of nominal FWHM. *(Just a guess)*
- **Define location of beam dump harps.**
  - Downstream of quad to help check quad strength.
  - Upstream of vacuum window.
    - Must operate in a vacuum.
    - Should be far enough upstream of window to avoid backscattering/secondaries problems.
    - Consider using a collimator.

Beam dump harps - positions

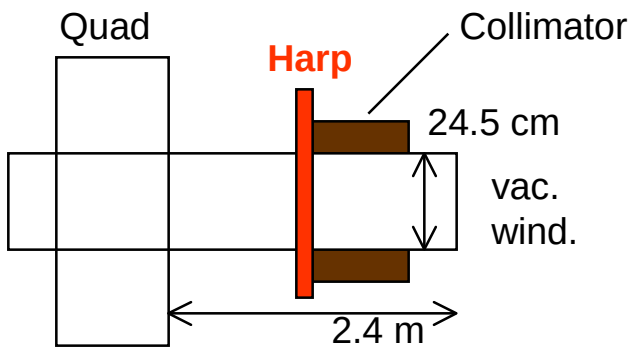

Linac dump

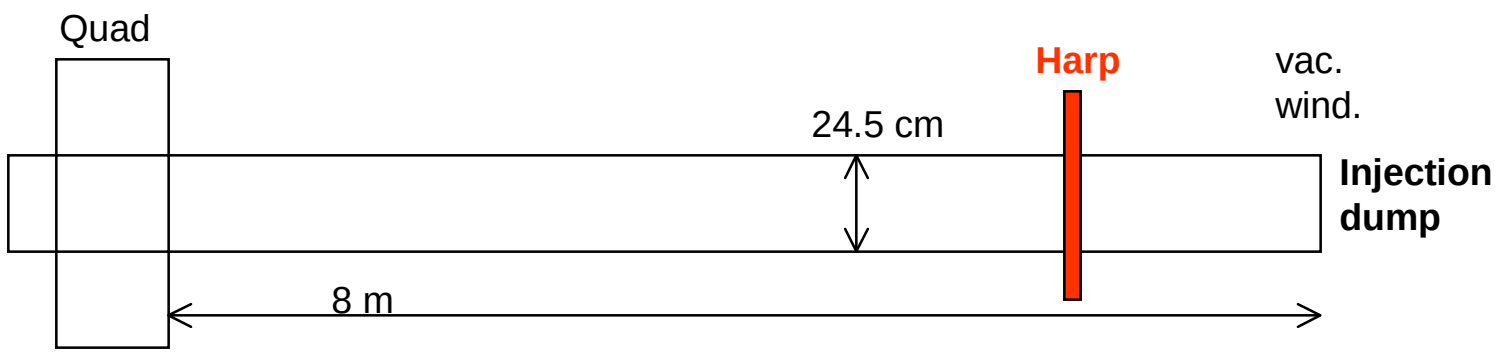

Injection dump

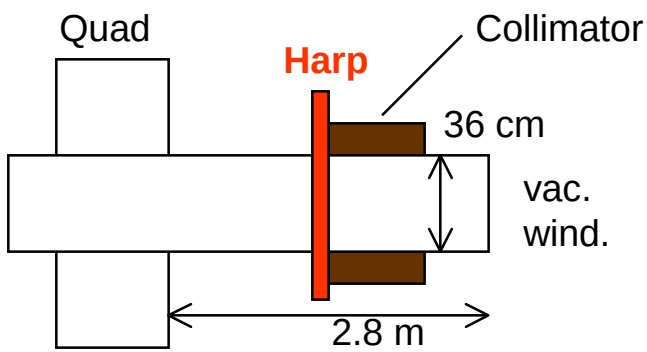

Extraction dump

Beam dump harps – operating conditions

- **Vacuum requirements**
  - At LANSCE we have operated harps in pressures as high as 10^{-3} Torr, but 10^{-5} or 10^{-6} Torr would be better.
- **Suggest collimator if located near vacuum window, to prevent backscatter and secondary particle problems.**
- **Harps will be fixed – not insertable.**
- **Aperture of harp should be at least as large as beam pipe aperture.**
- **Beam dump harps could get smaller if the beam pipe size is reduced (presently under consideration). This would simplify the harp design and reduce costs.**

Beam dump harps - construction

- **Radiation levels low enough that do not need special (e.g. ceramic) harp cards – use G-10 PC card.**
- **4-mil SiC wires mounted with springs and hooks.**
- **Variable wire pitch (dense in center, wider spacing off center).**
- **3 signal planes (x, y, x-y), and 4 HV planes.**

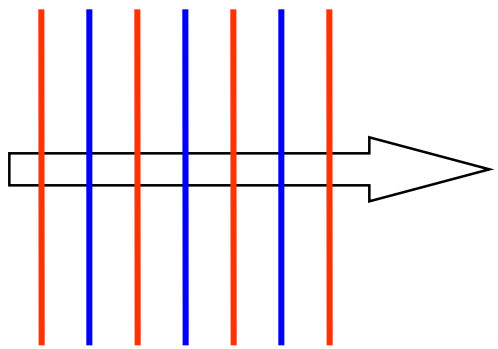

HV-Sig-HV-Sig-HV-Sig-HV

Harp signal wire density

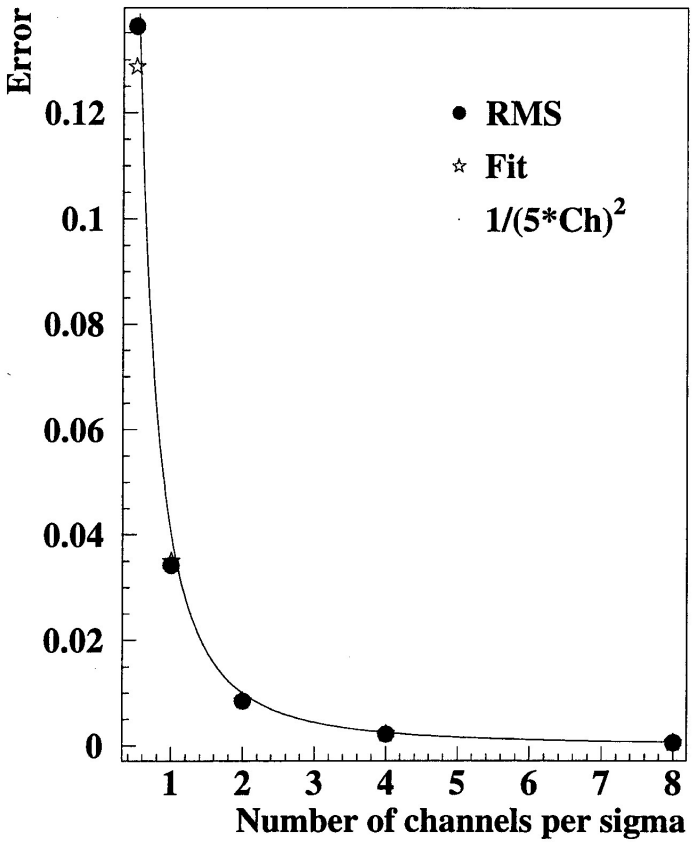

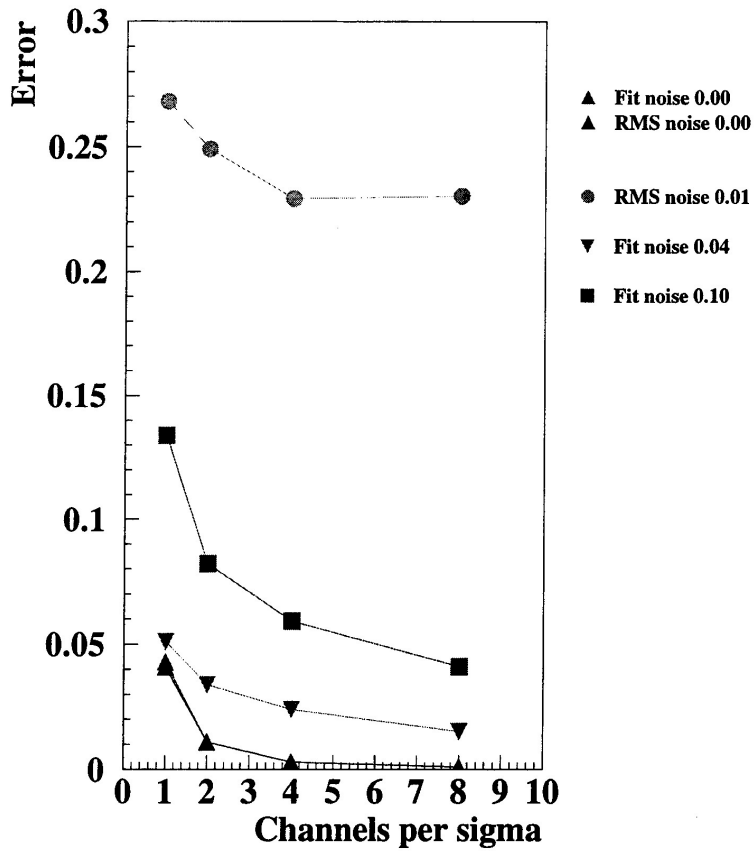

*E. Bravin, J. Bosser, R. Macaferri, M. Plum, "Gas Scintillation Profile Monitor", 3/Mar/00

Beam dump harp - wire layout

	Linac	Injection	Extraction
Est. x size [cm] *	1.4	3	8.1
Est. y size [cm] *	3.4	3	8.6
Pipe diameter [cm]	24.5	24.5	36
x wires cntr. [cm]	20 @ 0.2	20 @ 0.3	20 @ 0.5
x wires sides [cm]	30 @ 0.6	30 @ 0.6	30 @ 0.85
x coverage [cm]	21.8	24	35
y wires cntr. [cm]	20 @ 0.3	20 @ 0.3	20 @ 0.5
y wires sides [cm]	30 @ 0.6	30 @ 0.6	30 @ 0.85
y coverage [cm]	23.7	23.7	34.5
x-y wires cntr. [cm]	20 @ 0.3	20 @ 0.3	20 @ 0.5
x-y wires sides [cm]	30 @ 0.6	30 @ 0.6	30 @ 0.85
x-y coverage [cm]	23.7	23.7	34.5
* 2σ beam size.			

Beam dump harp – electronics and cabling

- **Need about 50 parallel channels per signal plane (150 total per harp).**
- **Suggest individually shielded twisted pair cabling, in conduit.**
- **Linac and injection line harps:**
  - Probably integrate for 100 to 1000 μs to improve signal to noise ratio.
  - Dynamic range of 1000 should be sufficient.
- **Extraction line harp:**
  - May require a large dynamic range – how large?
  - Need gain ranging?
  - Integration for 1 μs sufficient?
- **Design philosophy: electronics should be as similar as possible with other systems.**
- **Interface to control system should also as similar as possible.**

Harp cabling

Individually shielded twisted pair cables with a differential amplifier

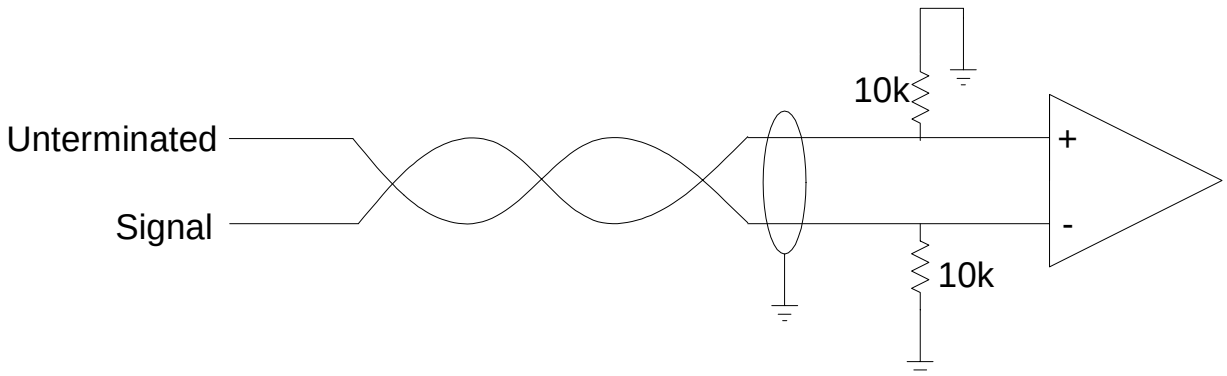

Target harp - purpose

- **Define purpose of the target harp.**
  - Tuning and commissioning.
  - Measure beam size and position to ensure proper beam delivery to the spallation target.
  - Measure beam size to prevent damage to vacuum window due to high beam current density.
  - Position accuracy ± 2 mm *(SNS Parameters List, March 2000, calls for ± 2 mm position accuracy on target.)*
  - Size accuracy – 10% *(just a guess for now)*.

Target harp – operating conditions

- **Vacuum requirements**
  - Will operate in beam line vacuum.
- **Use collimator to prevent backscatter and secondary particle problems.**
- **Harp is fixed – not insertable.**
- **Aperture of harp determined by 11” x 5” upstream collimator.**

Target harp - construction

- **We are basing the design of the target harp on an existing design used at LANSCE. This will save design and construction costs.**
- **Made of rad-hard ceramic.**
- **4-mil SiC wires mounted with springs and hooks.**
- **3 wire planes (x, y, x-y).**
- **x-y plane inclined at a non-45 deg. angle to optimize resolution to x-y coupling.**
- **Variable wire pitch (dense in center, wider spacing off center) for y and x-y planes.**

Target harp – beam box

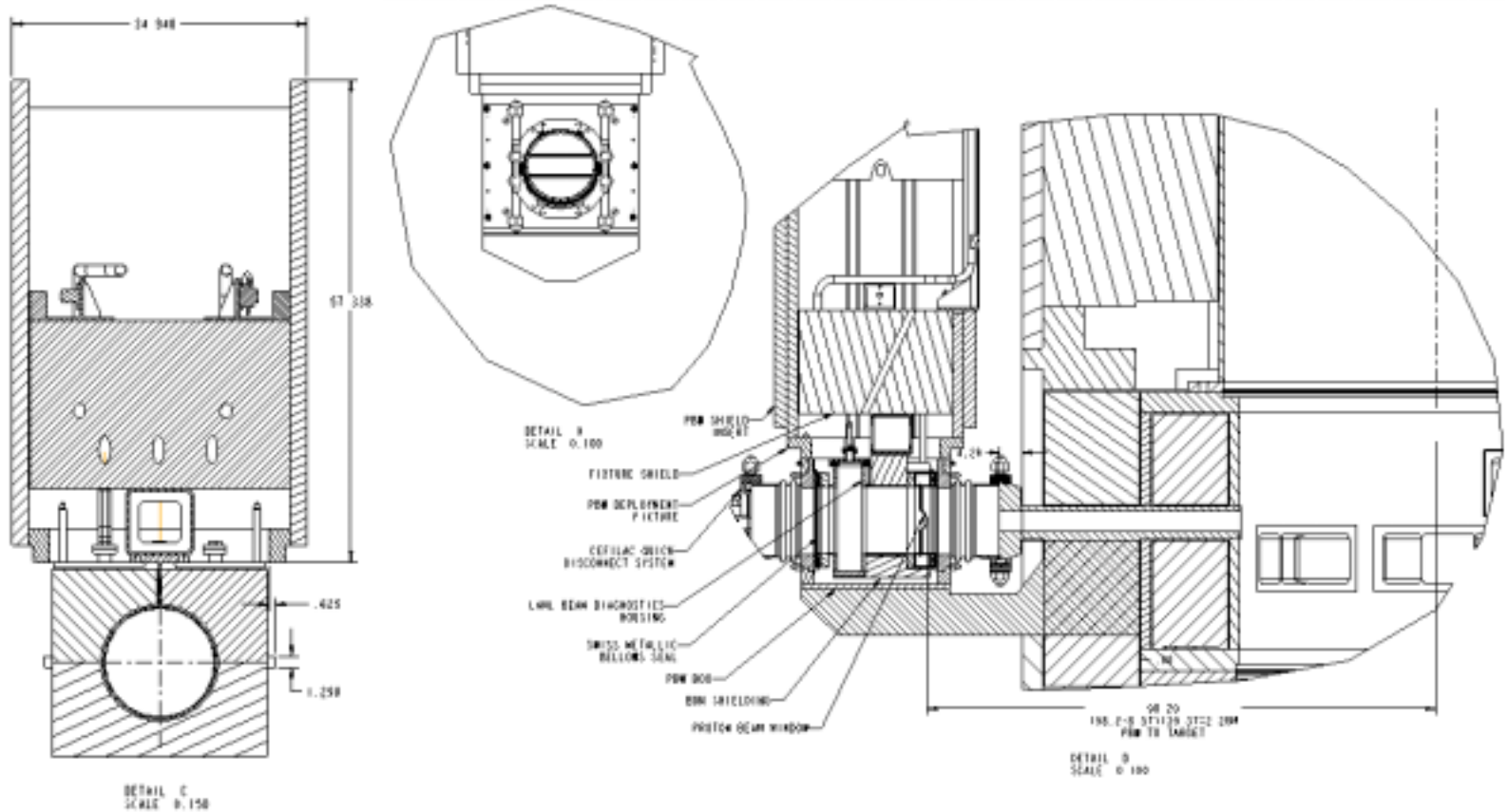

Target harp - wire layout

	TGT harp
Est. x size [cm] *	10
Est. y size [cm] *	2
Pipe size (x,y) [cm]	28 x 12.5
x wires cntr. [cm]	29 @ 1.0
x wires sides [cm]	
x coverage [cm]	28
y wires cntr. [cm]	20 @ 0.2
y wires sides [cm]	30 @ 0.3
y coverage [cm]	12.8
x-y wires cntr. [cm]	~ 50 @ 0.6
x-y wires sides [cm]	
x-y coverage [cm]	29.4
* 2σ beam size.	

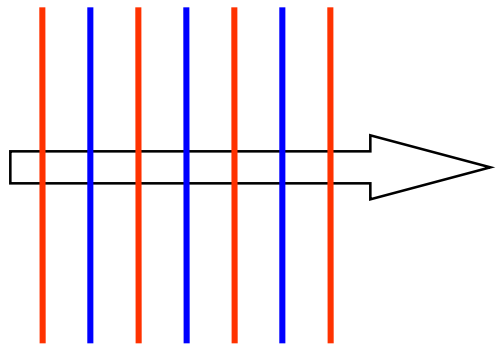

HV-Sig-HV-Sig-HV-Sig-HV

Target harp – electronics and cabling

- **Need about 29 + 50 + 50 = 129 parallel channels for all three signal planes.**
- **Suggest individually shielded twisted pair cabling, in conduit.**
- **May require a large dynamic range – how large?**
- **Need gain ranging?**
- **Integration for 1 μs sufficient?**
- **Design philosophy: electronics should be as similar as possible with other systems.**
- **Interface to control system should also as similar as possible.**

- **Do not recommend using this harp as a requirement to limit beam density on vacuum window and/or spallation target.**

LANSCE harp for 13” H^+ beam line

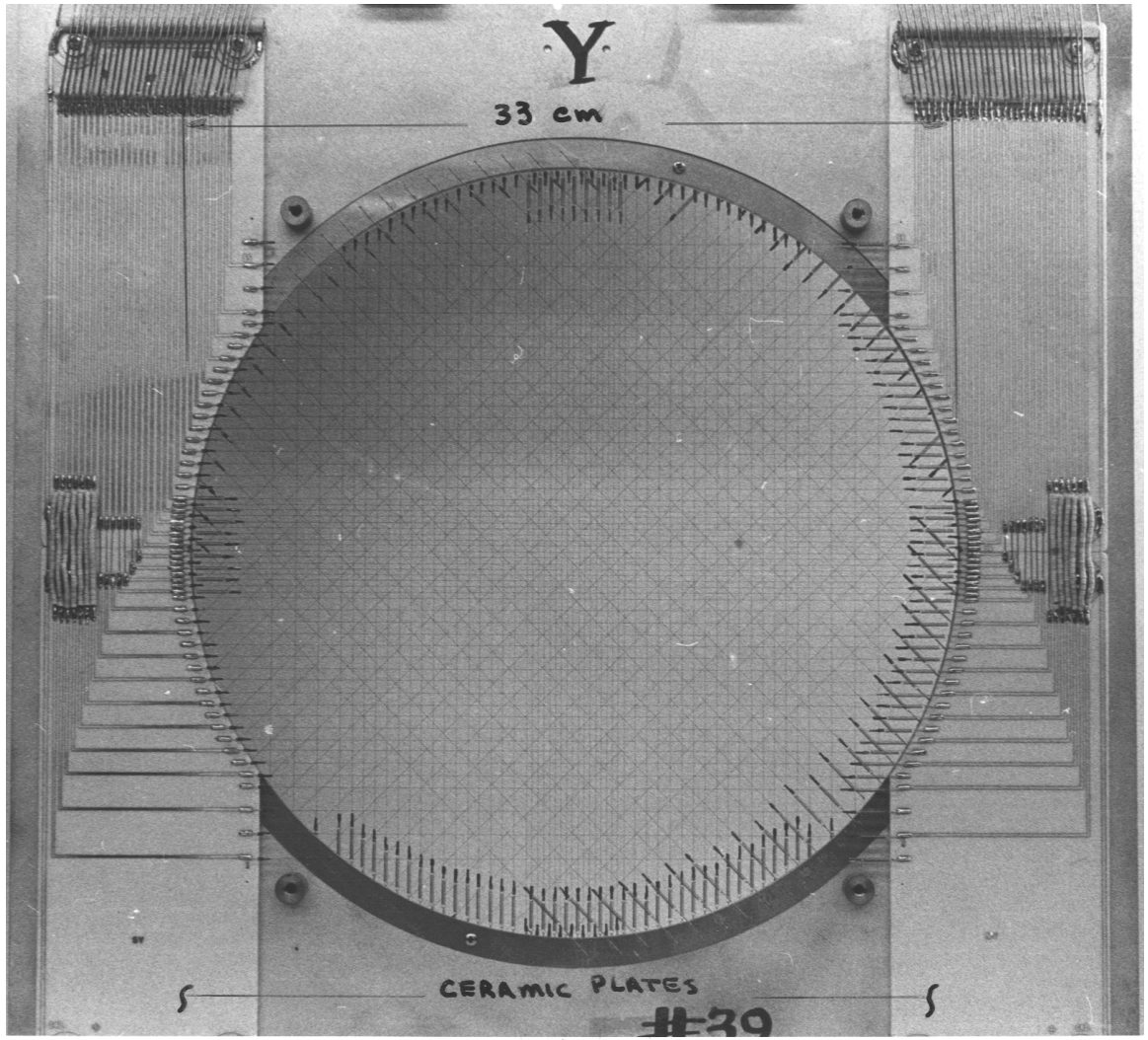

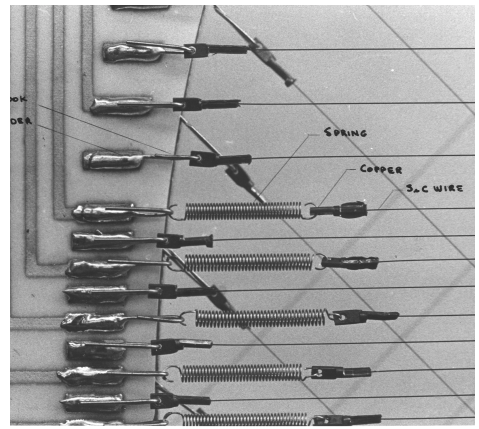

Summary

- **We are in the early stages of the harp system design.**
- **The detectors are standard and do not pose a technical risk.**
- **The electronics also do not pose a technical risk.**
- **We still need to firm up some system requirements before we can finalize the design.**